Isolated Footing Schedule

symbol	size (w x h x d)	bottom reinforcing
1	3'-0" x 3'-0" x 1'-0"	(4) #5 EACH WAY

LEGEND

1. FLOOD VENT (SMART VENT)
2. WINDOW WELL

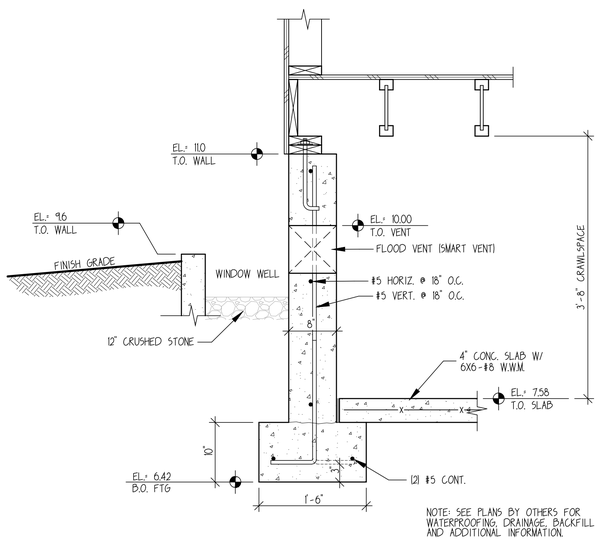

2 / S.1 Foundation Detail

Scale: 1" = 1'-0"

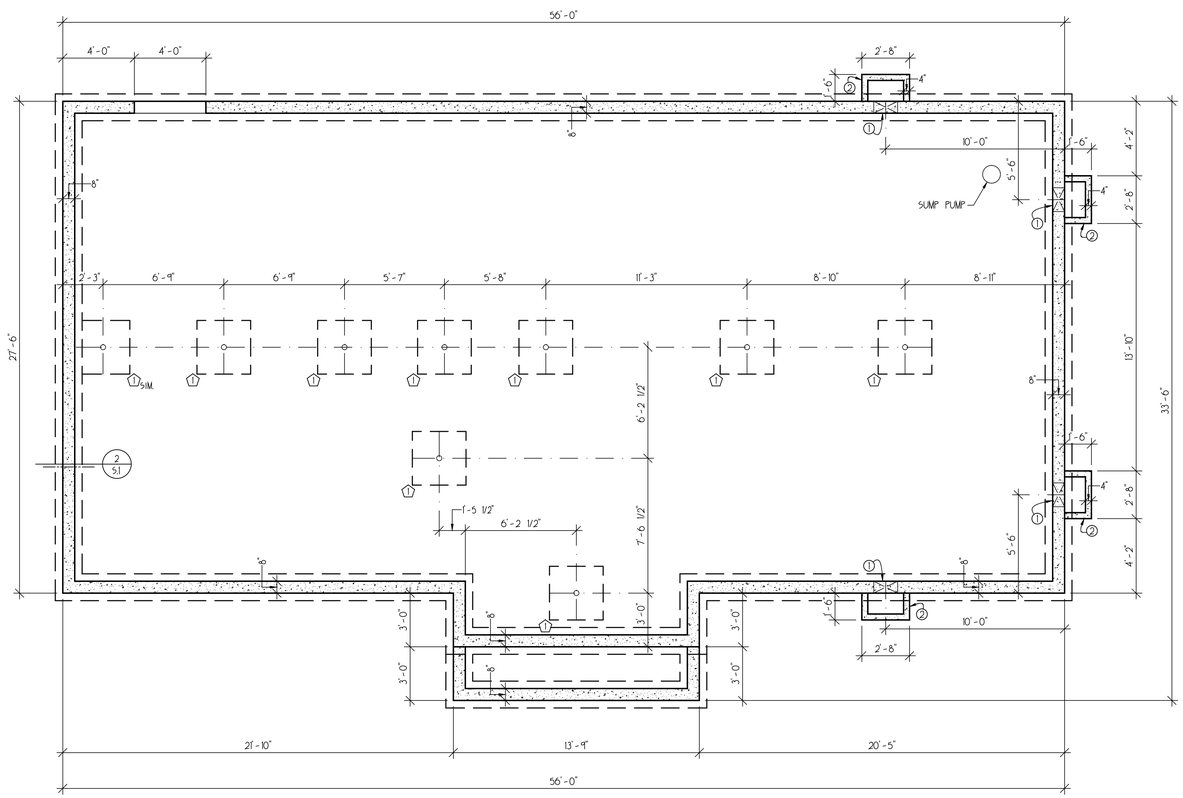

1 / S.1 Foundation Plan

Scale: 1/4" = 1'-0"

Revisions: Date: By:

Drawn By: H. Chen

Scale: As Shown

Job No.: 102263

Designed By:

Date: April 26, 2020

Checked By:

107 Beach Rd., Suite 202
P.O. Box 4458
Vineyard Haven, MA 02568
Phone: (508) 693-9933
Fax: (508) 693-4933
www.souratigroup.com

SOURATI engineering group

Foundation Plan for The Proposed Schawbel House
52 Eastville Avenue
Oak Bluffs, Massachusetts

Sheet: S.1