DUKES COUNTY
EMERGENCY COMMUNICATIONS FACILITY
OAK BLUFFS HIGHWAY
347 COUNTY ROAD
VINEYARD HAVEN, MA 02568

GENERAL NOTES

1. ALL WORK SHALL BE IN ACCORDANCE WITH THE 2015 INTERNATIONAL BUILDING CODE AS MODIFIED BY THE MASSACHUSETTS STATE BUILDING CODE (780 CMR 9TH EDITION), INCLUDING THE TIA–222 REVISION "G" "STRUCTURAL STANDARDS FOR STEEL ANTENNA TOWERS AND SUPPORTING STRUCTURES." 2016 MASSACHUSETTS FIRE SAFETY CODE, NATIONAL ELECTRICAL CODE AND LOCAL CODES.
2. CONTRACTOR SHALL REVIEW ALL DRAWINGS AND SPECIFICATIONS IN THE CONTRACT DOCUMENT SET. CONTRACTOR SHALL COORDINATE ALL WORK SHOWN IN THE SET OF DRAWINGS. THE CONTRACTOR SHALL PROVIDE A COMPLETE SET OF DRAWINGS TO ALL SUBCONTRACTORS AND ALL RELATED PARTIES. THE SUBCONTRACTORS SHALL EXAMINE ALL THE DRAWINGS AND SPECIFICATIONS FOR THE INFORMATION THAT AFFECTS THEIR WORK.
3. CONTRACTOR SHALL PROVIDE A COMPLETE BUILD–OUT WITH ALL FINISHES, STRUCTURAL, MECHANICAL, AND ELECTRICAL COMPONENTS AND PROVIDE ALL ITEMS AS SHOWN OR INDICATED ON THE DRAWINGS OR IN THE WRITTEN SPECIFICATIONS.
4. CONTRACTOR SHALL FURNISH ALL MATERIAL, LABOR AND EQUIPMENT TO COMPLETE THE WORK AND FURNISH A COMPLETED JOB ALL IN ACCORDANCE WITH LOCAL AND STATE GOVERNING AUTHORITIES AND OTHER AUTHORITIES HAVING LAWFUL JURISDICTION OVER THE WORK.
5. CONTRACTOR SHALL SECURE AND PAY FOR ALL PERMITS AND ALL INSPECTIONS REQUIRED AND SHALL ALSO PAY FEES REQUIRED FOR THE GENERAL CONSTRUCTION, PLUMBING, ELECTRICAL AND HVAC. PERMITS SHALL BE PAID FOR BY THE RESPECTIVE SUBCONTRACTORS.
6. CONTRACTOR SHALL MAINTAIN A CURRENT SET OF DRAWINGS AND SPECIFICATIONS ON SITE AT ALL TIMES AND INSURE DISTRIBUTION OF NEW DRAWINGS TO SUBCONTRACTORS AND OTHER RELEVANT PARTIES AS SOON AS THEY ARE MADE AVAILABLE. ALL OLD DRAWINGS SHALL BE MARKED VOID AND REMOVED FROM THE CONTRACT AREA. THE CONTRACTOR SHALL FURNISH AN "AS–BUILT" SET OF DRAWINGS TO OWNER UPON COMPLETION OF PROJECT.
7. LOCATION OF EQUIPMENT, AND WORK SUPPLIED BY OTHERS THAT IS DIAGRAMMATICALLY INDICATED ON THE DRAWINGS SHALL BE DETERMINED BY THE CONTRACTOR. THE CONTRACTOR SHALL DETERMINE LOCATIONS AND DIMENSIONS SUBJECT TO STRUCTURAL CONDITIONS AND WORK OF THE SUBCONTRACTORS.
8. THE CONTRACTOR IS SOLELY RESPONSIBLE TO DETERMINE CONSTRUCTION PROCEDURE AND SEQUENCE, AND TO ENSURE THE SAFETY OF THE EXISTING STRUCTURES AND ITS COMPONENT PARTS DURING CONSTRUCTION. THIS INCLUDES THE ADDITION OF WHATEVER SHORING, BRACING, UNDERPINNING, ETC. THAT MAY BE NECESSARY.
9. DRAWINGS INDICATE THE MINIMUM STANDARDS, BUT IF ANY WORK SHOULD BE INDICATED TO BE SUBSTANDARD TO ANY ORDINANCES, LAWS, CODES, RULES, OR REGULATIONS BEARING ON THE WORK, THE CONTRACTOR SHALL INCLUDE IN HIS WORK AND SHALL EXECUTE THE WORK CORRECTLY IN ACCORDANCE WITH SUCH ORDINANCES, LAWS, CODES, RULES OR REGULATIONS WITH NO INCREASE IN COSTS.
10. ALL UTILITY WORK SHALL BE IN ACCORDANCE WITH LOCAL UTILITY COMPANY REQUIREMENTS AND SPECIFICATIONS.
11. ALL EQUIPMENT AND PRODUCTS PURCHASED ARE TO BE REVIEWED BY CONTRACTOR AND ALL APPLICABLE SUBCONTRACTORS FOR ANY CONDITION PER MFR.'S RECOMMENDATIONS. CONTRACTOR TO SUPPLY THESE ITEMS AT NO COST TO OWNER OR CONSTRUCTION MANAGER.
12. ANY AND ALL ERRORS, DISCREPANCIES, AND "MISSED" ITEMS ARE TO BE BROUGHT TO THE ATTENTION OF THE SITE OWNER'S CONSTRUCTION MANAGER DURING THE BIDDING PROCESS BY THE CONTRACTOR. ALL THESE ITEMS ARE TO BE INCLUDED IN THE BID. NO 'EXTRA' WILL BE ALLOWED FOR MISSED ITEMS.
13. CONTRACTOR SHALL BE RESPONSIBLE FOR ALL ON–SITE SAFETY FROM THE TIME THE JOB IS AWARDED UNTIL ALL WORK IS COMPLETE AND ACCEPTED BY THE OWNER.
14. CONTRACTOR TO REVIEW ALL SHOP DRAWINGS AND SUBMIT COPY TO ENGINEER FOR APPROVAL. DRAWINGS MUST BEAR THE CHECKER'S INITIALS BEFORE SUBMITTING TO THE CONSTRUCTION MANAGER FOR REVIEW.
15. THE CONTRACTOR SHALL FIELD VERIFY ALL DIMENSIONS, ELEVATIONS, ANGLES, AND EXISTING CONDITIONS AT THE SITE, PRIOR TO FABRICATION AND/OR INSTALLATION OF ANY WORK IN THE CONTRACT AREA.
16. COORDINATION, LAYOUT, FURNISHING AND INSTALLATION OF CONDUIT AND ALL APPURTENANCES REQUIRED FOR PROPER INSTALLATION OF ELECTRICAL AND TELECOMMUNICATION SERVICE SHALL BE THE SOLE RESPONSIBILITY OF THE CONTRACTOR.
17. ALL DAMAGE CAUSED TO ANY EXISTING STRUCTURE SHALL BE THE SOLE RESPONSIBILITY OF THE CONTRACTOR. THE CONTRACTOR WILL BE HELD LIABLE FOR ALL REPAIRS REQUIRED FOR EXISTING STRUCTURES IF DAMAGED DURING CONSTRUCTION ACTIVITIES.
18. THE CONTRACTOR SHALL CONTACT "DIG SAFE" (DIAL 811) AT LEAST 48 HOURS PRIOR TO ANY EXCAVATIONS. ALL UTILITIES SHALL BE IDENTIFIED AND CLEARLY MARKED. CONTRACTOR SHALL MAINTAIN AND PROTECT MARKED UTILITIES THROUGHOUT PROJECT COMPLETION.
19. CONTRACTOR SHALL COMPLY WITH OWNERS ENVIRONMENTAL ENGINEER ON ALL METHODS AND PROVISIONS FOR ALL EXCAVATION ACTIVITIES INCLUDING SOIL DISPOSAL. ALL BACKFILL MATERIALS TO BE PROVIDED BY THE CONTRACTOR.

VICINITY MAP

SCALE: 1" = 1000'

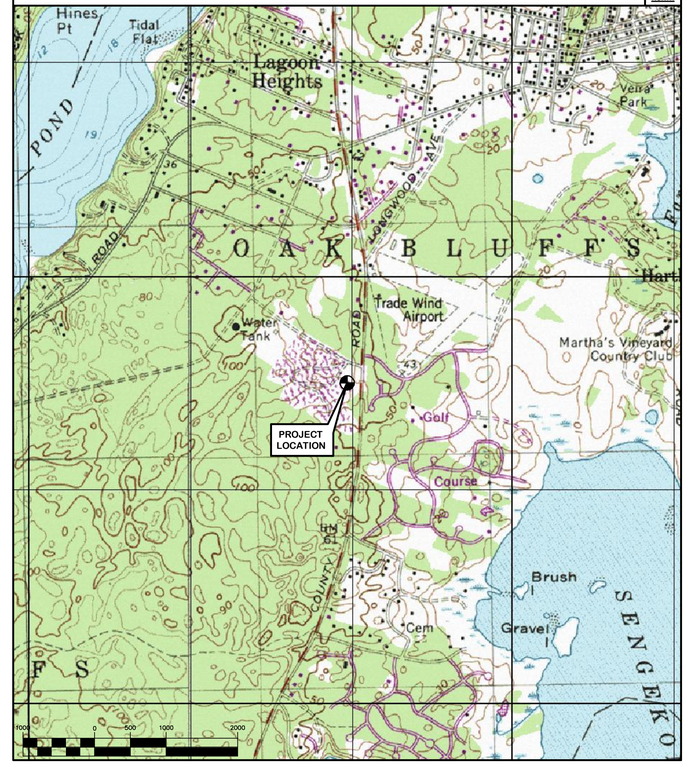

PROJECT SCOPE

1. THE GENERAL SCOPE OF WORK CONSISTS OF THE CONSTRUCTION OF A 2,025± SQ FT GRAVELED SURFACE EMERGENCY COMMUNICATIONS FACILITY COMPOUND. WITHIN THE COMPOUND, A 140' SST TOWER IS PROPOSED ALONG WITH A 10' x 12' EQUIPMENT SHELTER, A 1000 GALLON ABOVE–GROUND PROPANE TANK AND A 35 KW PROPANE FUELED BACKUP POWER GENERATOR. TOWER AND TOWER FOUNDATION DESIGN IS BY OTHERS.
2. POWER AND TELCO UTILITIES ARE PROPOSED TO BE ROUTED UNDERGROUND FROM AN EXISTING UTILITY POLE LOCATED DIRECTLY ADJACENT TO THE PROPOSED COMMUNICATION COMPOUND.

PROJECT SUMMARY

SITE NAME:	OAK BLUFFS HIGHWAY
SITE ADDRESS:	347 COUNTY ROAD VINEYARD HAVEN, MA 02568
MAP/ BLOCK/ PARCEL:	29/ 0/ 156
PROPERTY OWNER:	TOWN OF OAKS BLUFF MAILING ADDRESS: PO BOX 1327 OAKS BLUFFS, MA 02557
DISTRICTS:	R3 RESIDENTIAL ZONING DISTRICT WIRELESS COMMUNICATIONS OVERLAY DISTRICT (WCOD)
CUSTOMER CONTACT:	DUKES COUNTY SHERIFFS DEPARTMENT DEPUTY ANTHONY GOULD (508) 696–7862
PROJECT MANAGERS:	MOTOROLA SOLUTIONS DIANE DAMINO (203) 615–3695 PYRAMID NETWORK SERVICES, LLC ROB MCCABE (315) 373–3040
ENGINEER OF RECORD:	CENTEK ENGINEERING, INC. 63–2 NORTH BRANFORD ROAD BRANFORD, CT 06405 CARLO F. CENTORE, P.E. (203) 488–0580 EXT. 122
SITE COORDINATES:	LATITUDE: 41° 26' 14.86" N LONGITUDE: 70° 34' 30.99" W GROUND ELEVATION: ± 72' AMSL (COORDINATES AND GROUND ELEVATION PROVIDED BY PYRAMID NETWORK SERVICES)

SHEET INDEX

SHT. NO.	DESCRIPTION	REV. NO.
T–1	TITLE SHEET	1
N–1	GENERAL NOTES AND SPECIFICATIONS	1
C–0	LOCUS/ SITE LOCATION PLAN	1
C–1	SITE OVERLAY PLAN	1
C–2	COMPOUND PLANS AND ELEVATION	1
C–3	SITE DETAILS	1
C–4	EROSION CONTROL DETAILS AND NOTES	1
C–6	SITE DETAILS AND SHELTER ELEVATIONS	1
E–1	UTILITY SITE PLAN AND RISER DIAGRAM	1
E–2	GROUNDING SCHEMATIC AND NOTES	1
E–3	GROUNDING PLAN AND NOTES	1
E–4	ELECTRICAL DETAILS	1
E–5	ELECTRICAL DETAILS	1
E–6	ELECTRICAL DETAILS	1
E–7	ELECTRICAL SPECIFICATIONS	1

REV.	DATE	DRAWN BY	CHK'D BY	DESCRIPTION
1	05/08/19	DMD	CJC	ZONING/CONSTRUCTION DRAWINGS – REVISED PER CLIENT COMMENTS
0	04/30/19	TJR	DMD	ZONING/CONSTRUCTION DRAWINGS

PROFESSIONAL ENGINEER SEAL

CENTEK engineering
Centered on Solutions™
(203) 488-0580
(203) 488-8587 Fax
63-2 North Branford Road
Branford, CT 06405
www.CentekEng.com

PYRAMID NETWORK SERVICES

WIRELESS COMMUNICATIONS FACILITY

OAK BLUFFS HIGHWAY

347 COUNTRY ROAD
VINEYARD HAVEN, MA 02568

DATE:	04/24/19
SCALE:	AS NOTED
JOB NO.	19017.03

TITLE SHEET

T–1

Sheet No. 1 of 15

NOTES AND SPECIFICATIONS

DESIGN BASIS:

GOVERNING CODE: 2015 INTERNATIONAL BUILDING (IBC) AS MODIFIED BY 780 CMR 9TH EDITION.

1. DESIGN CRITERIA:

- WIND LOAD: PER TIA 222 G (ANTENNA MOUNTS)
- RISK CATEGORY III (BASED ON IBC TABLE 1604.5)
- NOMINAL DESIGN SPEED (OTHER STRUCTURE): 120 MPH (Vasd) (EXPOSURE C/ IMPORTANCE FACTOR 1.0 BASED ON ASCE 7–10).
- SEISMIC LOAD (DOES NOT CONTROL): PER ASCE 7–10 MINIMUM DESIGN LOADS FOR BUILDING AND OTHER STRUCTURES.

GENERAL NOTES

1. IF ANY FIELD CONDITIONS EXIST WHICH PRECLUDE COMPLIANCE WITH THE DRAWINGS, THE CONTRACTOR SHALL IMMEDIATELY NOTIFY THE ENGINEER AND SHALL PROCEED WITH AFFECTED WORK AFTER CONFLICT IS SATISFACTORILY RESOLVED.
2. DIMENSIONS AND DETAILS SHALL BE CHECKED AGAINST THE PRE MANUFACTURED EQUIPMENT BUILDING SHOP DRAWINGS.
3. THE CONTRACTOR SHALL VERIFY AND COORDINATE THE SIZE AND LOCATION OF ALL OPENINGS, SLEEVES AND ANCHOR BOLTS AS REQUIRED BY ALL TRADES.
4. REFER TO DRAWING T1 FOR ADDITIONAL NOTES AND REQUIREMENTS.

SITE NOTES

1. THE CONTRACTOR SHALL CALL UTILITIES PRIOR TO THE START OF CONSTRUCTION.
2. ACTIVE EXISTING UTILITIES, WHERE ENCOUNTERED IN THE WORK, SHALL BE PROTECTED AT ALL TIMES. THE ENGINEER SHALL BE NOTIFIED IMMEDIATELY, PRIOR TO PROCEEDING, SHOULD ANY UNCOVERED EXISTING UTILITY PRECLUDE COMPLETION OF THE WORK IN ACCORDANCE WITH THE CONTRACT DOCUMENTS.
3. ALL RUBBISH, STUMPS, DEBRIS, STICKS, STONES AND OTHER REFUSE SHALL BE REMOVED OFF SITE AND BE LEGALLY DISPOSED, AT NO ADDITIONAL COST.
4. THE SITE SHALL BE GRADED TO CAUSE SURFACE WATER TO FLOW AWAY FROM THE EQUIPMENT AND TOWER AREAS.
5. NO FILL OR EMBANKMENT MATERIAL SHALL BE PLACED ON FROZEN GROUND. FROZEN MATERIALS, SNOW OR ICE SHALL NOT BE PLACED IN ANY FILL OR EMBANKMENT.
6. THE SUBGRADE SHALL BE COMPACTED AND BROUGHT TO A SMOOTH UNIFORM GRADE PRIOR TO FINISHED SURFACE APPLICATION.
7. THE AREAS OF THE COMPOUND DISTURBED BY THE WORK SHALL BE RETURNED TO THEIR ORIGINAL CONDITION.
8. CONTRACTOR SHALL MINIMIZE DISTURBANCE TO EXISTING SITE DURING CONSTRUCTION. EROSION CONTROL MEASURES, SHALL BE IN CONFORMANCE WITH THE LOCAL GUIDELINES FOR EROSION AND SEDIMENT CONTROL.
9. IF ANY FIELD CONDITIONS EXIST WHICH PRECLUDE COMPLIANCE WITH THE DRAWINGS, THE CONTRACTOR SHALL IMMEDIATELY NOTIFY THE ENGINEER AND SHALL PROCEED WITH AFFECTED WORK AFTER CONFLICT IS SATISFACTORILY RESOLVED.
10. DIMENSIONS AND DETAILS SHALL BE CHECKED AGAINST THE PRE MANUFACTURED EQUIPMENT BUILDING SHOP DRAWINGS.

EARTHWORK NOTES

1. COMPACTED GRAVEL FILL SHALL BE FURNISHED AND PLACED AS A FOUNDATION FOR STRUCTURES, WHERE SHOWN ON THE CONTRACT DRAWINGS OR DIRECTED BY THE ENGINEER.
2. CRUSHED STONE FILL SHALL BE PLACED IN 12" MAX. LIFTS AND CONSOLIDATED USING A HAND OPERATED VIBRATORY PLATE COMPACTOR WITH A MINIMUM OF 2 PAQSSES OF COMPACTOR PER LIFT.
3. COMPACTED GRAVEL FILL TO BE WELL GRADED BANK RUN GRAVEL MEETING THE FOLLOWING GRADATION REQUIREMENTS:

SIEVE DESIGNATION	% PASSING
1 ½"	100
No. 4	40–70
No. 100	5–20
No. 200	4–8

4. CRUSHED STONE TO BE UNIFORMLY GRADED, CLEAN, HARD PROCESS AGGREGATE MEETING THE FOLLOWING GRADATION REQUIREMENTS:

SIEVE DESIGNATION	% PASSING
1"	100
¾"	90–100
½"	0–15
⅜"	0–5

5. SELECT BACKFILL FOR FOUNDATION WALLS SHALL BE FREE OF ORGANIC MATERIAL, TOPSOIL, DEBRIS AND BOULDERS LARGER THAN 6".
6. GRAVEL AND GRANULAR FILL SHALL BE INSTALLED IN 8" MAX. LIFTS. COMPACTED TO 95% MIN. AT MAX. DRY DENSITY.
7. NON WOVEN GEOTEXTILE FOR SEPARATION PURPOSES SHALL BE MIRAFI 140N, OR ENGINEER APPROVED EQUAL.

FOUNDATION CONSTRUCTION:

1. ALL FOOTINGS SHALL BE PLACED ON SUITABLE, COMPACTED SOIL HAVING ADEQUATE BEARING CAPACITY AND FREE OF ORGANIC CONTENT, CLAY, OR OTHER UNSUITABLE MATERIAL. ADDITIONAL EXCAVATION MAY BE REQUIRED BELOW FOOTING ELEVATIONS INDICATED IF UNSUITABLE MATERIAL IS ENCOUNTERED. BOTTOM OF ALL FOOTINGS SHALL BE AT LEAST 2'–0" BELOW EXISTING GRADE. BOTTOM OF EXTERIOR WALL FOOTINGS SHALL BE AT LEAST 4'–0" BELOW FINISHED GRADE.
2. SUBGRADE PREPARATION: IF UNSUITABLE SOIL IS ENCOUNTERED, REMOVE ALL UNSUITABLE MATERIALS FROM BELOW PROPOSED STRUCTURE FOUNDATIONS AND COMPACT EXPOSED SOIL SURFACES. PLACE AND COMPACT APPROVED GRAVEL FILL. PLACEMENT OF ALL COMPACTED FILL MUST BE UNDER SUPERVISION OF AN APPROVED TESTING LABORATORY. FILL SHALL BE COMPACTED IN LAYERS NOT TO EXCEED 10" BEFORE COMPACTION. DETERMINE MAXIMUM DRY DENSITY IN ACCORDANCE WITH ASTM D1557–70 AND MAKE ONE (1) FIELD DENSITY TEST IN ACCORDANCE WITH ASTM D2167–66 FOR EACH 50 CUBIC YARDS OF COMPACTED FILL. BUT NOT LESS THAN ONE (1) PER LAYER, TO INSURE COMPACTION TO 95% OF MAX. DRY DENSITY.
3. ALL SOIL SURROUNDING AND UNDER ALL FOOTINGS SHALL BE KEPT REASONABLY DRY AND PROTECTED FROM FREEZING AND FROST ACTION DURING THE COURSE OF CONSTRUCTION.
4. WHERE GROUNDWATER IS ENCOUNTERED, DEWATERING SHALL BE ACCOMPLISHED CONTINUOUSLY AND COMPLETELY DURING FOUNDATION CONSTRUCTION. PROVIDE CRUSHED STONE AS REQUIRED TO STABILIZE FOOTING SUBGRADE.
5. ALL FOOTINGS ARE TO REST ON FIRM SOIL, REGARDLESS OF ELEVATIONS SHOWN ON THE DRAWINGS, BUT IN NO CASE MAY FOOTING ELEVATIONS BE HIGHER THAN INDICATED ON THE FOUNDATION PLAN, UNLESS SPECIFICALLY DIRECTED BY THE ENGINEER.
6. FOUNDATION DRAINAGE: CONTINUOUS PERIMETER FOOTING DRAINS SHALL BE PROVIDED AROUND ALL BELOW GRADE HABITABLE OR USABLE SPACES. FOUNDATION DRAINAGE SHALL COMPLY WITH BUILDING CODE REQUIREMENTS UNLESS A MORE SUBSTANTIAL SYSTEM IS INDICATED OR SPECIFIED.
7. FOUNDATION WATERPROOFING AND DAMPPROOFING SHALL COMPLY WITH BUILDING CODE REQUIREMENTS UNLESS A MORE SUBSTANTIAL SYSTEM IS INDICATED OR SPECIFIED.

CONCRETE CONSTRUCTION

1. CONCRETE CONSTRUCTION SHALL CONFORM TO THE FOLLOWING STANDARDS:

   ACI 211 – STANDARD PRACTICE FOR SELECTING PROPORTIONS FOR NORMAL AND HEAVYWEIGHT CONCRETE.

   ACI 301 – SPECIFICATIONS FOR STRUCTURAL CONCRETE FOR BUILDINGS.

   ACI 302 – GUIDE FOR CONCRETE FLOOR AND SLAB CONSTRUCTION

   ACI 304 – RECOMMENDED PRACTICE FOR MEASURING, MIXING, TRANSPORTING, AND PLACING CONCRETE.

   ACI 306.1 STANDARD SPECIFICATION FOR COLD WEATHER CONCRETING

   ACI 318 – BUILDING CODE REQUIREMENTS FOR REINFORCED CONCRETE.

2. CONCRETE SHALL DEVELOP COMPRESSIVE STRENGTH IN 28 DAYS AS FOLLOWS:

SLABS ON GRADE	4,000 PSI
ALL OTHER CONCRETE	3,000 PSI

3. REINFORCING STEEL SHALL BE 60,000 PSI YIELD STRENGTH.
4. WELDED WIRE FABRIC SHALL CONFORM TO ASTM– A–185.
5. ALL DETAILING, FABRICATION, AND ERECTION OF REINFORCING BARS, UNLESS OTHERWISE NOTED, MUST FOLLOW THE LATEST ACI CODE AND LATEST ACI "MANUAL OF STANDARD PRACTICE FOR DETAILING REINFORCED CONCRETE STRUCTURES".
6. CONCRETE COVER OVER REINFORCING SHALL CONFORM TO THE FOLLOWING, UNLESS OTHERWISE SHOWN:

SURFACES EXPOSED TO THE WEATHER	1–1/2 INCHES
FORMED SURFACES EXPOSED TO EARTH	1–1/2 INCHES
BOTTOM OF FOOTINGS	3 INCHES
SURFACES NOT EXPOSED TO EARTH OR WEATHER	1–1/2 INCHES

7. NO STEEL WIRE, METAL FORM TIES, OR ANY OTHER METAL SHALL REMAIN WITHIN THE REQUIRED COVER OF ANY CONCRETE SURFACE.
8. ALL REINFORCEMENT SHALL BE CONTINUOUS UNLESS OTHERWISE NOTED. SPLICES SHALL BE WELL STAGGERED. ADDITIONAL BARS AND SPECIAL BENDING DETAILS ARE REQUIRED AT INTERSECTING WALLS AND AT JOINTS. SUCH DETAILS SHALL COMPLY WITH ACI 315 RECOMMENDATIONS UNLESS OTHERWISE SHOWN.
9. NO TACK WELDING OF REINFORCING WILL BE PERMITTED.
10. NO CALCIUM CHLORIDE OR ADMIXTURES CONTAINING MORE THAN 1 % CHLORIDE BY WEIGHT OF ADMIXTURE SHALL BE USED IN THE CONCRETE.
11. UNLESS OTHERWISE NOTED, ALL LAP SPLICES SHALL BE 48 BAR DIAMETERS.
12. SHEAR KEYS (2" X 4"), SEPARATING CONCRETE POURS, SHALL BE PROVIDED IN ALL CONCRETE WALLS AND BETWEEN FOOTINGS AND WALLS.
13. AT ALL OPENINGS IN CONCRETE WALLS AND SUSPENDED SLABS, UNLESS OTHERWISE DETAILED, PROVIDE THE FOLLOWING ADDITIONAL REINFORCING:
    1 – #4 EACH FACE AT EACH SIDE OF OPENING. EXTEND 2'–0" BEYOND OPENING.
    1 – #4 x 4'–0" LONG EACH FACE DIAGONALLY AT EACH CORNER.
14. INSPECTION AND TESTING OF CONCRETE WORK SHALL BE PERFORMED BY AN INDEPENDENT TESTING LABORATORY, PAID BY THE OWNER, AND APPROVED BY THE ENGINEER. THE INSPECTOR SHALL OBSERVE CONDITION OF SOILS AND FORMWORK BEFORE FOOTINGS ARE PLACED, SIZE, SPACING AND LOCATION OF REINFORCEMENT, AND PLACEMENT OF CONCRETE.
15. THE TESTING COMPANY SHALL ALSO OBTAIN A MINIMUM OF THREE (3) COMPRESSIVE STRENGTH TEST SPECIMENS FOR EACH CONCRETE MIX DESIGN. ONE SPECIMEN TESTED AT 7 DAYS, ONE AT 28 DAYS, AND ONE HELD IN RESERVE FOR FUTURE TESTING, IF NEEDED.
16. FOUR COPIES OF ALL INSPECTION TEST REPORTS SHALL BE SUBMITTED TO THE ENGINEER WITHIN TEN (10) WORKING DAYS OF THE DATE OF INSPECTION.

SLAB ON GRADE CONSTRUCTION:

1. PLACE AND COMPACT GRAVEL FILL IN LAYERS NOT TO EXCEED 10" BEFORE COMPACTION. DETERMINE MAXIMUM DRY DENSITY IN ACCORDANCE WITH ASTM D1557 AND MAKE ONE (1) FIELD DENSITY TEST IN ACCORDANCE WITH ASTM D2167 FOR EACH 50 CUBIC YARDS OF COMPACTED FILL, BUT NOT LESS THAN ONE (1) PER LAYER, TO ENSURE COMPACTION TO 95% OF MAXIMUM DRY DENSITY.
2. SAW CUT CONTROL JOINTS 1 /8" WIDE AND TO A DEPTH EQUAL TO 1 /4 OF THE SLAB THICKNESS. CONSTRUCTION JOINTS AS REQUIRED SHALL BE KEYED AND LOCATED AT CONTROL JOINT INTERVALS. ALL CONTROL JOINTS SHALL BE FILLED WITH EUCO EPOXY #600 EPOXY JOINT FILLER AS MANUFACTURED BY EUCLID CHEMICAL CO. OR APPROVED EQUAL.
3. SAW CUT CONTROL JOINTS AT 20'–0" ON CENTER MAXIMUM WITHIN 12 HOURS OF CONCRETE PLACEMENT.
4. SLABS ON GRADE FINISHES: STEEL TROWEL FINISH AS DEFINED IN ACI 301. CURE SLAB WITH SONNEBORN KURE–N–SEAL WB OR APPROVED EQUAL, APPLIED AS RECOMMENDED BY MANUFACTURER.
5. CONSTRUCTION JOINT SPACING IN FOUNDATION WALLS SHALL NOT EXCEED 40 FEET NOR 20 FEET FROM ANY CORNER. JOINTS SHALL BE KEYED AND HORIZONTAL BARS SHALL EXTEND THRU JOINT AND BE 48 BAR DIAMETER SPLICED.
6. IN REINFORCED CONCRETE WALLS AND FOOTINGS, PROVIDE CORNER DOWELS OF THE SAME SIZE AND AT THE SAME SPACING AS HORIZONTAL REINFORCING. DOWELS SHALL HAVE A 48 BAR DIAMETER SPLICE WITH HORIZONTAL REINFORCING EACH DIRECTION.
7. WHERE FOOTINGS ARE IN CLOSE PROXIMITY TO SUBSURFACE PIPING, TOP OF FOOTING SHALL BE LOWERED TO PROVIDE A MINIMUM OF 8" BELOW INVERT ELEVATION OF PIPING.
8. CONCRETE PIERS (IF PROVIDED): PLACE CONCRETE PIERS AND WALLS TOGETHER, SET PIER STEEL AND EXTEND WALL STEEL THROUGH PIER VERTICAL BARS. PROVIDE DOWELS WITH STANDARD HOOK FROM FOOTINGS AT ALL PIERS. SIZE AND QUANTITY OF DOWELS TO MATCH VERTICAL PIER REINFORCING.
9. PROVIDE CORROSION RESISTANT ACCESSORIES IN ALL EXPOSED CONCRETE.
10. RUB ALL EXPOSED CONCRETE SURFACES SMOOTH AND FINISH WITH CEMENT GROUT.
11. PROVIDE AIR ENTRAINMENT IN ALL EXTERIOR CONCRETE AS WELL AS GARAGE AND PORCH SLABS THAT WILL BE EXPOSED TO DEICING SALTS.

STRUCTURAL STEEL NOTES

1. ALL STRUCTURAL STEEL IS DESIGNED BY ALLOWABLE STRESS DESIGN (ASD):

   A. STRUCTURAL STEEL (W SHAPES)–––ASTM A992, (FY = 50 KSI)
   B. STRUCTURAL STEEL (OTHER SHAPES)–––ASTM A36, (FY = 36 KSI)
   C. STRUCTURAL HSS (RECTANGULAR SHAPES)–––ASTM A500 GRADE B, (FY = 46 KSI)
   D. STRUCTURAL HSS (ROUND SHAPES)–––ASTM A500 GRADE B, (FY = 42 KSI)
   C. CONNECTION BOLTS–––ASTM A325–N
   D. ANCHOR RODS–––ASTM F 1554
   E. WELDING ELECTRODE–––ASTM E 70XX

2. EXISTING DIMENSIONS OF STRUCTURE SHOWN ON THESE PLANS ARE NOT GUARANTEED. CONTRACTOR SHALL TAKE FIELD MEASUREMENTS NECESSARY TO ASSURE PROPER FIT OF ALL FINISHED WORK AND SHALL ASSUME FULL RESPONSIBILITY FOR THEIR ACCURACY WHEN SHOP DRAWINGS BASED ON FIELD MEASUREMENTS ARE SUBMITTED FOR REVIEW TO THE ENGINEER.
3. CONTRACTOR TO REVIEW ALL SHOP DRAWINGS AND SUBMIT COPY TO ENGINEER FOR APPROVAL. DRAWINGS MUST BEAR THE CHECKER'S INITIALS BEFORE SUBMITTING TO THE ENGINEER FOR REVIEW. SHOP DRAWINGS SHALL INCLUDE THE FOLLOWING: SECTION PROFILES, SIZES, CONNECTION ATTACHMENTS, REINFORCING, ANCHORAGE, SIZE AND TYPE OF FASTENERS AND ACCESSORIES. INCLUDE ERECTION DRAWINGS, ELEVATIONS AND DETAILS.
4. STRUCTURAL STEEL SHALL BE DETAILED, FABRICATED AND ERECTED IN ACCORDANCE WITH THE LATEST PROVISIONS OF AISC MANUAL OF STEEL CONSTRUCTION.
5. PROVIDE ALL PLATES, CLIP ANGLES, CLOSURE PIECES, STRAP ANCHORS, MISCELLANEOUS PIECES AND HOLES REQUIRED TO COMPLETE THE STRUCTURE.
6. CONNECTION ANGLES SHALL HAVE A MINIMUM THICKNESS OF 1/4 INCHES.
7. MILL BEARING ENDS OF COLUMNS, STIFFENERS, AND OTHER BEARING SURFACES TO TRANSFER LOAD OVER ENTIRE CROSS SECTION.
8. FABRICATE BEAMS WITH MILL CAMBER UP.
9. THE STRUCTURE IS DESIGNED TO BE SELF SUPPORTING AND STABLE AFTER THE WORK IS FULLY COMPLETED.
10. FIT AND SHOP ASSEMBLE FABRICATIONS IN THE LARGEST PRACTICAL SECTIONS FOR DELIVERY TO SITE.
11. BOLT HOLES SHALL BE PUNCHED OR DRILLED, FLAME CUT HOLES ARE NOT ACCEPTABLE.
12. LEVEL AND PLUMB INDIVIDUAL MEMBERS OF THE STRUCTURE TO AN ACCURACY OF 1:500, BUT NOT TO EXCEED 1/4" IN THE FULL HEIGHT OF THE COLUMN.
13. INSTALL FABRICATIONS PLUMB AND LEVEL, ACCURATELY FITTED, AND FREE FROM DISTORTIONS OR DEFECTS.
14. SHOP CONNECTIONS SHALL BE WELDED OR HIGH STRENGTH BOLTED.
15. STRUCTURAL CONNECTION BOLTS SHALL CONFORM TO ASTM A325–N. ALL BOLTS SHALL BE 3/4" DIAMETER MINIMUM AND SHALL HAVE A MINIMUM OF TWO BOLTS, UNLESS NOTED OTHERWISE ON THE DRAWINGS.
16. ALL BOLTED JOINTS SHALL BE SNUG TIGHT (ST) UNLESS OTHERWISE DESIGNATED AS PRETENSIONED (PT) OR SLIP CRITICAL (SC) ON THE DRAWINGS.
17. CONTRACTOR SHALL COMPLY WITH AWS CODE FOR PROCEDURES APPEARANCE AND QUALITY OF WELDS, AND WELDING PROCESSES SHALL BE QUALIFIED IN ACCORDANCE WITH AWS "STANDARD QUALIFICATION PROCEDURES". ALL WELDING SHALL BE DONE USING E70XX ELECTRODES AND WELDING SHALL CONFORM TO AISC AND D1.1 WHERE FILLET WELD SIZES ARE NOT SHOWN, PROVIDE THE MINIMUM SIZE PER TABLET J2.4 IN THE AISC "MANUAL OF STEEL CONSTRUCTION" 9TH EDITION. AT THE COMPLETION OF WELDING, ALL DAMAGE TO GALVANIZED COATING SHALL BE REPAIRED.
18. USE PRECAUTIONS & PROCEDURES PER AWS D1.1 WHEN WELDING GALVANIZED METALS.
19. ALL WELDING SHALL BE PERFORMED BY A CERTIFIED WELDER IN ACCORDANCE WITH AWS STANDARDS.
20. ALL STEEL MATERIAL (EXPOSED TO WEATHER) SHALL BE GALVANIZED AFTER FABRICATION IN ACCORDANCE WITH ASTM A123 "ZINC (HOT DIPPED GALVANIZED) COATINGS" ON IRONS AND STEEL PRODUCTS.
21. ALL BOLTS, ANCHORS AND MISCELLANEOUS HARDWARE SHALL BE GALVANIZED IN ACCORDANCE WITH ASTM A153 "ZINC COATING (HOT–DIP) ON IRON AND STEEL HARDWARE".
22. NOTIFY THE ENGINEER PRIOR TO FIELD CUTTING OR MODIFYING APPROVED FABRICATIONS.
23. THE ENGINEER SHALL BE NOTIFIED OF ANY INCORRECTLY FABRICATED, DAMAGED OR OTHERWISE MISFITTING OR NON CONFORMING MATERIALS OR CONDITIONS TO REMEDIAL OR CORRECTIVE ACTION. ANY SUCH ACTION SHALL REQUIRE ENGINEER REVIEW.
24. COMMENCEMENT OF STRUCTURAL STEEL WORK WITHOUT NOTIFYING THE ENGINEER OF ANY DISCREPANCIES WILL BE CONSIDERED ACCEPTANCE OF PRECEDING WORK.

REV.	DATE	DRAWN BY	CHK'D BY	DESCRIPTION
0	04/30/19	TJR	DMD	ZONING/CONSTRUCTION DRAWINGS
1	05/09/19	DMD	CJC	ZONING/CONSTRUCTION DRAWINGS – REVISED PER CLIENT COMMENTS

PROFESSIONAL ENGINEER SEAL

STATE OF CONNECTICUT · CARLO F. CENTORE · No. 16694 · LICENSED PROFESSIONAL ENGINEER

PYRAMID Network Services, LLC

MOTOROLA SOLUTIONS

CENTEK engineering
Centered on Solutions℠
(203) 488-0580
(203) 488-8587 Fax
63-2 North Branford Road
Branford, CT 06405
www.CentekEng.com

PYRAMID NETWORK SERVICES

WIRELESS COMMUNICATIONS FACILITY

OAK BLUFFS HIGHWAY

347 COUNTRY ROAD
VINEYARD HAVEN, MA 02568

DATE:	04/24/19
SCALE:	AS NOTED
JOB NO.	19017.03

GENERAL NOTES & SPECIFICATIONS

N–1

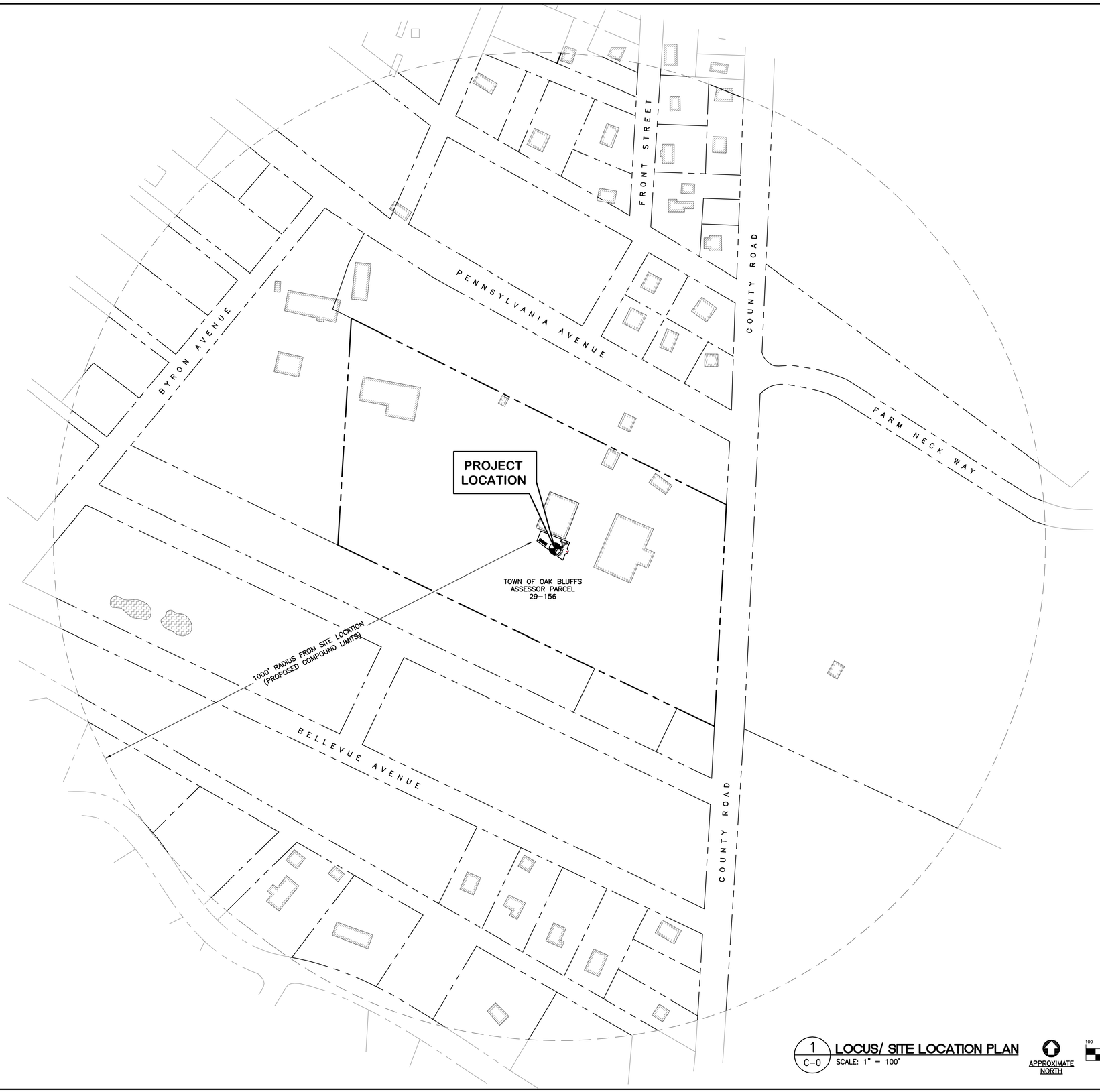

MAP REFERENCE NOTE:

PROPERTY LINES AND SUBJECT PROPERTY OWNERSHIP INFORMATION SHOWN HEREIN ARE REFERENCED FROM OAK BLUFFS GEOGRAPHIC INFORMATION SYSTEM (GIS) DATABASE.

OAK BLUFFS TOWN HALL
56 SCHOOL STREET
OAK BLUFFS, MA 02557

LEGEND:

- PROPERTY LINE
- WATER
- EXISTING BUILDING
- 1000' RADIUS FROM SITE LOCATION

1 / C-0 **LOCUS/ SITE LOCATION PLAN**
SCALE: 1" = 100'

APPROXIMATE NORTH

100 0 50 100 200 400
(IN FEET)
1 inch = 100 ft.

REV.	DATE	DRAWN BY	CHK'D BY	DESCRIPTION
1	05/09/19	DMD	CJC	ZONING/CONSTRUCTION DRAWINGS - REVISED PER CLIENT COMMENTS
0	04/30/19	TJR	DMD	ZONING/CONSTRUCTION DRAWINGS

PROFESSIONAL ENGINEER SEAL

STATE OF CONNECTICUT
CARLOS F. CELADORE
No. 16694
LICENSED PROFESSIONAL ENGINEER

PYRAMID Network Services, LLC
MOTOROLA SOLUTIONS

CENTEK engineering
Centered on Solutions™
(203) 488-0580
(203) 488-8587 Fax
63-2 North Branford Road
Branford, CT 06405
www.CentekEng.com

PYRAMID NETWORK SERVICES
WIRELESS COMMUNICATIONS FACILITY
OAK BLUFFS HIGHWAY
347 COUNTRY ROAD
VINEYARD HAVEN, MA 02568

DATE: 04/24/19
SCALE: AS NOTED
JOB NO. 19017.03

LOCUS/ SITE LOCATION PLAN

C-0

Sheet No. 3 of 15

SYMBOLS LEGEND

- RIP RAP DRAINAGE WAY EDGE
- MAJOR CONTOUR LINE
- MINOR CONTOUR LINE
- CHAINLINK FENCE
- STRUCTURE
- PAVEMENT EDGE
- UTILITY POLE
- OW — OVERHEAD WIRES
- x 72.6 — SPOT ELEVATION

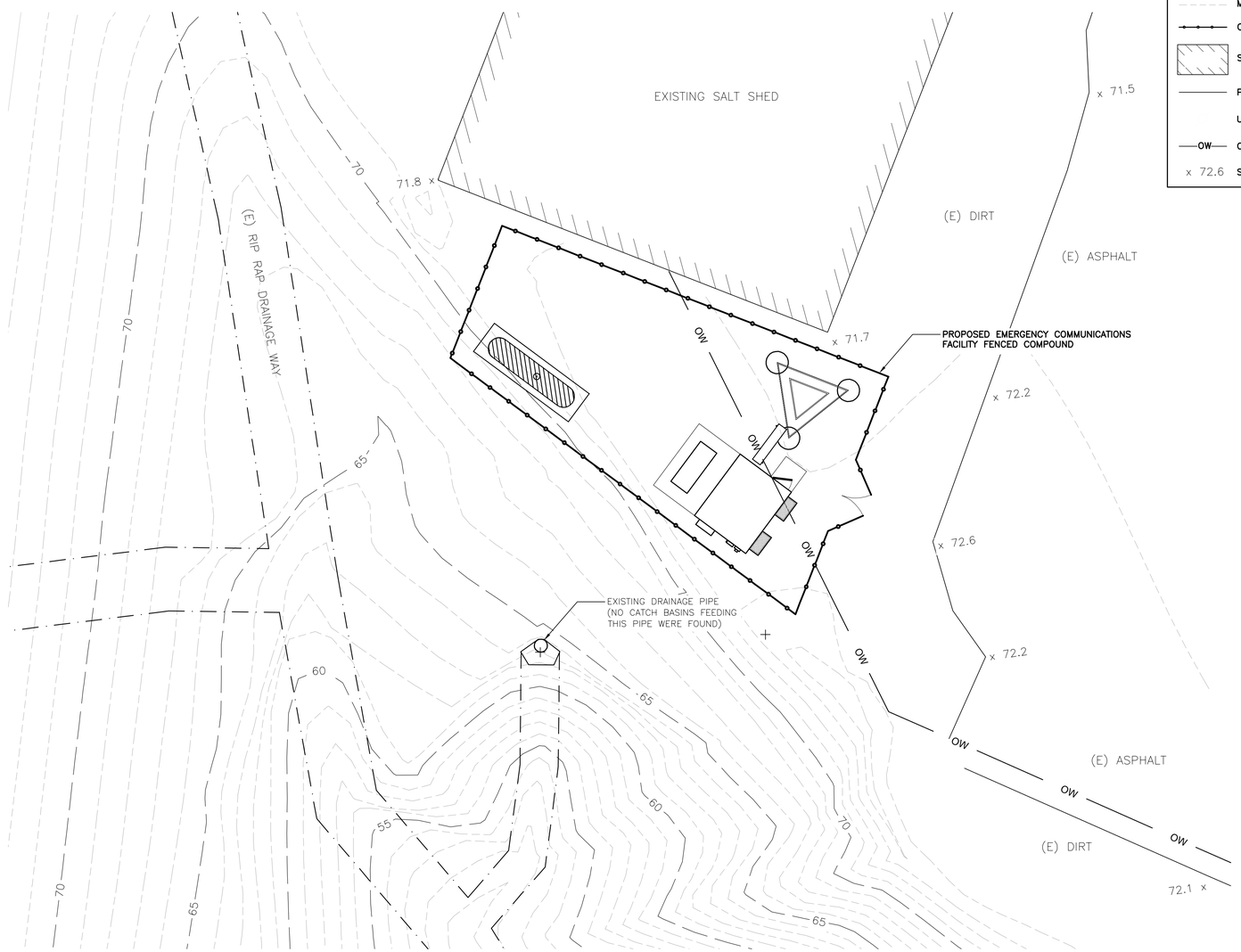

1 / C-1 **SITE OVERLAY PLAN**
SCALE: 1" = 10' - 0"

NORTH

10 0 5 10 20 40
(IN FEET)
1 inch = 10 ft.

PLAN REFERENCE NOTE:

EXISTING SITE FEATURES, TOPOGRAPY, SPOT ELEVATIONS AND STRUCTURE(S) SHOWN HEREIN ARE REFERENCED FROM "WORKING PLAN DRAWING, OAK BLUFFS, MA" PREPARED BY SCHOFIELD, BARBINI & HOEHN INC., FOR PYRAMID NETWORK SERVICES, SCALE 1" = 20' DATED APRIL 4, 2014.

REV.	DATE	DRAWN BY	CHK'D BY	DESCRIPTION
0	04/30/19	TJR	DMD	ZONING/CONSTRUCTION DRAWINGS
	05/08/19	DMD	CJC	ZONING/CONSTRUCTION DRAWINGS - REVISED PER CLIENT COMMENTS

PROFESSIONAL ENGINEER SEAL

CENTEK engineering
Centered on Solutions™
(203) 488-0580
(203) 488-8587 Fax
63-2 North Branford Road
Branford, CT 06405
www.CentekEng.com

PYRAMID NETWORK SERVICES
WIRELESS COMMUNICATIONS FACILITY
OAK BLUFFS HIGHWAY
347 COUNTRY ROAD
VINEYARD HAVEN, MA 02568

DATE: 04/24/19
SCALE: AS NOTED
JOB NO. 19017.03

SITE OVERLAY PLAN

C-1

Sheet No. 4 of 15

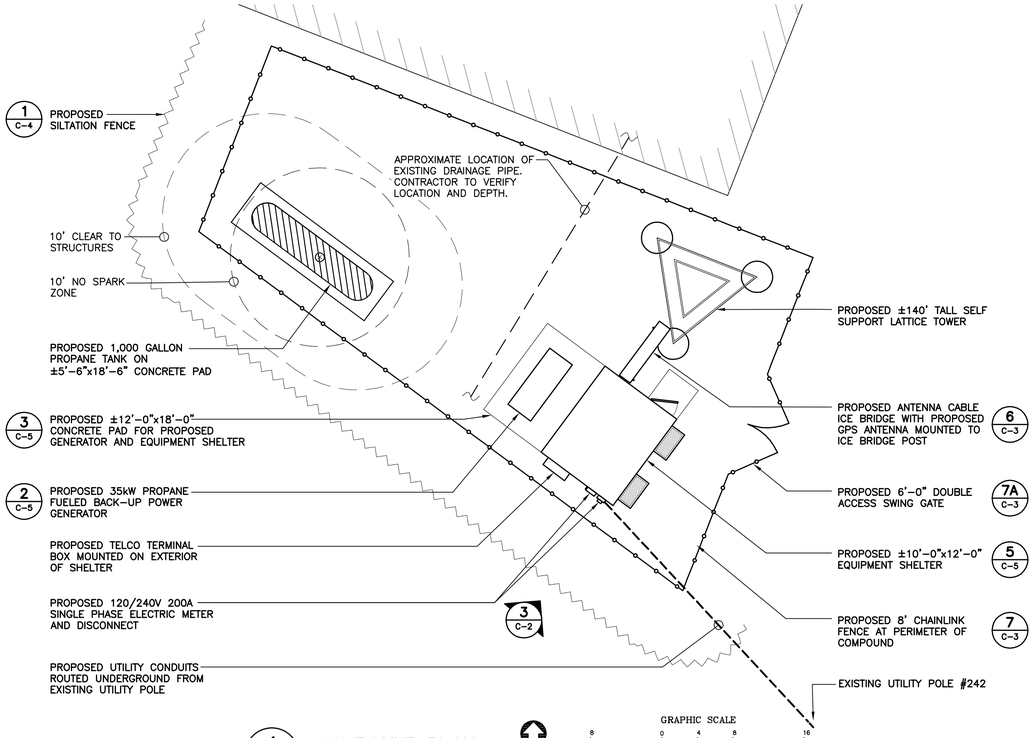

1 C-2 **COMPOUND PLAN**
SCALE: 1/8" = 1'-0"

APPROXIMATE NORTH

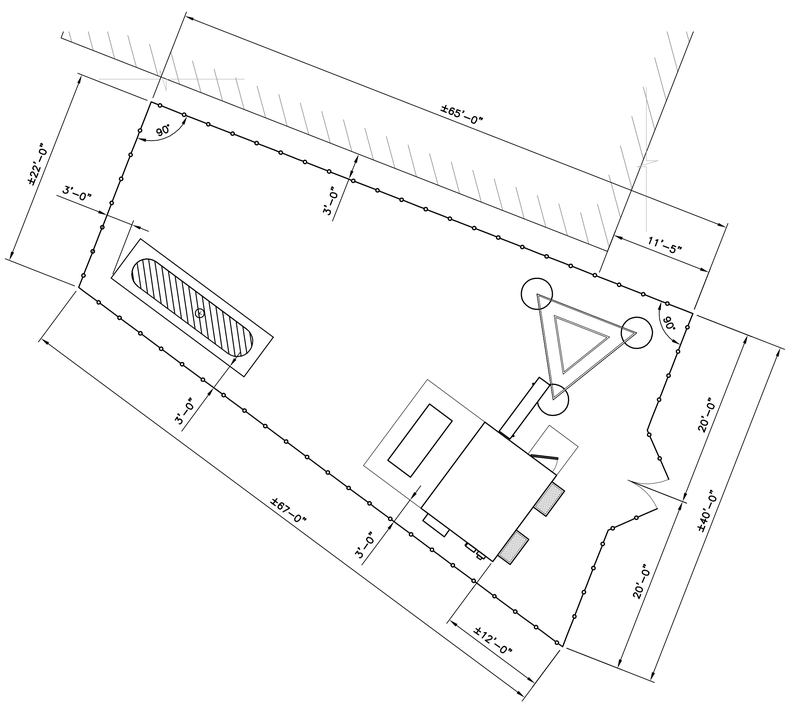

2 C-2 **COMPOUND LAYOUT PLAN**
SCALE: 1/8" = 1'-0"

APPROXIMATE NORTH

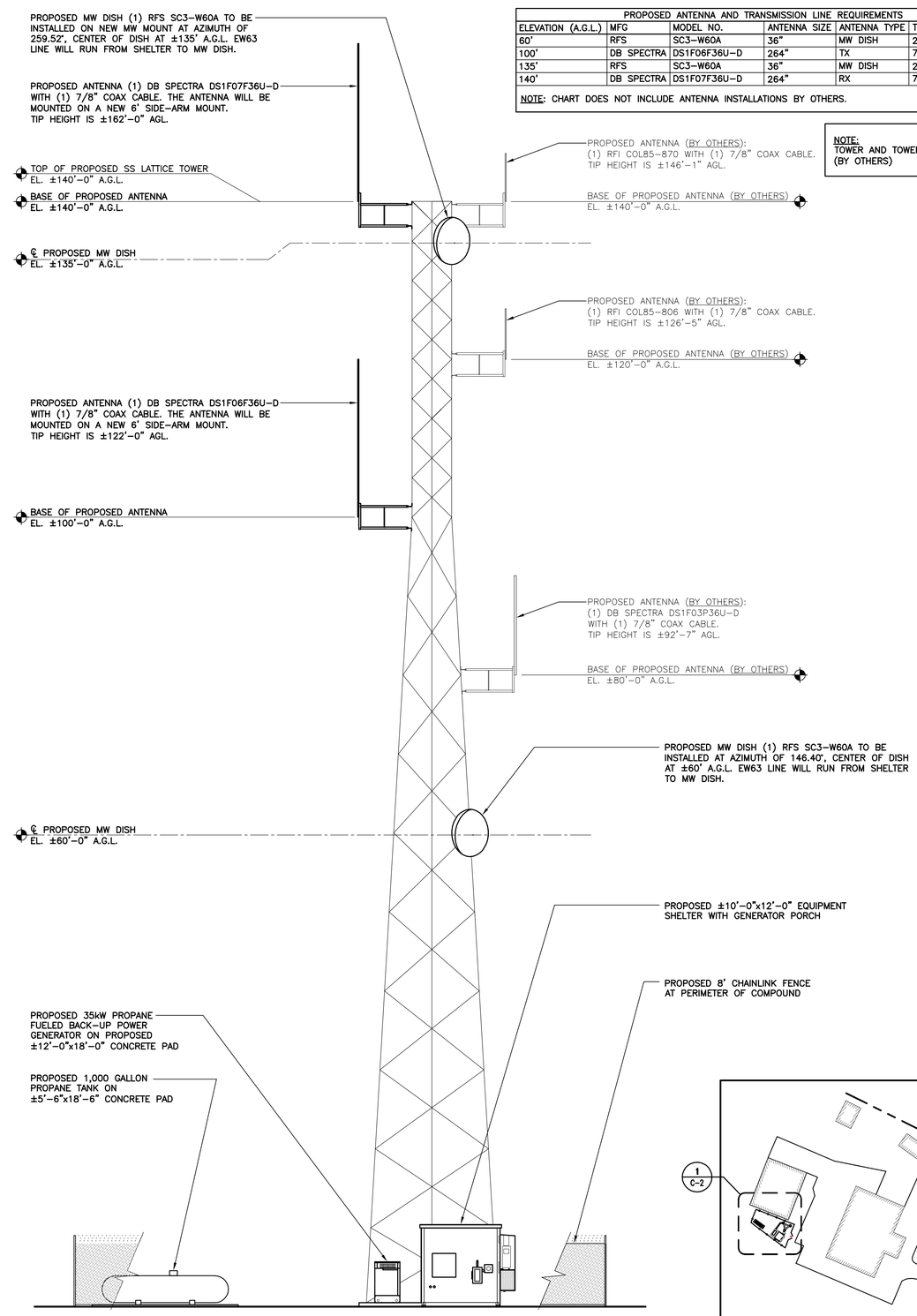

3 C-2 **SOUTHWEST ELEVATION**
SCALE: 1/8" = 1'-0"

PROPOSED ANTENNA AND TRANSMISSION LINE REQUIREMENTS					
ELEVATION (A.G.L.)	MFG	MODEL NO.	ANTENNA SIZE	ANTENNA TYPE	TRANSMISSION LINE DIA.
60'	RFS	SC3-W60A	36"	MW DISH	2.01"
100'	DB SPECTRA	DS1F06F36U-D	264"	TX	7/8"
135'	RFS	SC3-W60A	36"	MW DISH	2.01"
140'	DB SPECTRA	DS1F07F36U-D	264"	RX	7/8"

NOTE: CHART DOES NOT INCLUDE ANTENNA INSTALLATIONS BY OTHERS.

NOTE:
TOWER AND TOWER FOUNDATION DESIGN (BY OTHERS)

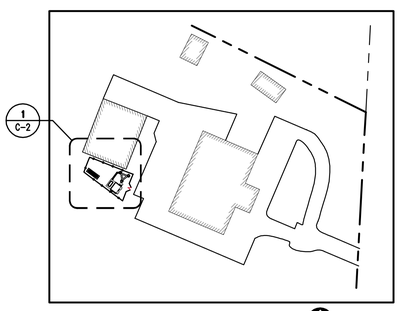

4 C-2 **SITE KEY PLAN**
SCALE: 1" = 100'-0"

APPROXIMATE NORTH

REV.	DATE	DRAWN BY	CHK'D BY	DESCRIPTION
0	04/30/19	TJR	DMD	ZONING/CONSTRUCTION DRAWINGS
	05/08/19	DMD	CJC	ZONING/CONSTRUCTION DRAWINGS – REVISED PER CLIENT COMMENTS

PROFESSIONAL ENGINEER SEAL

CENTEK engineering
Centered on Solutions™
(203) 488-0580
(203) 488-8587 Fax
63-2 North Branford Road
Branford, CT 06405
www.CentekEng.com

PYRAMID NETWORK SERVICES
WIRELESS COMMUNICATIONS FACILITY
OAK BLUFFS HIGHWAY
347 COUNTRY ROAD
VINEYARD HAVEN, MA 02568

DATE: 04/24/19
SCALE: AS NOTED
JOB NO. 19017.03

COMPOUND PLANS AND AND ELEVATION

C-2

Sheet No. 5 of 15

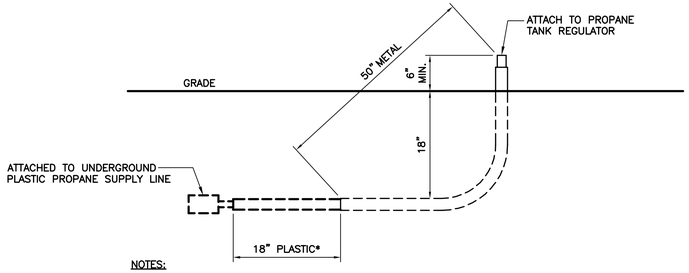

NOTES:

1. *PLASTIC PROPANE SUPPLY LINE MUST BE PROTECTED WITH CONDUIT IF IT CAN NOT BE BURIED 18" OR MORE DEEP WITH SAND TO PROTECT IT (AT LEAST 1" OF SAND AROUND THE PIPE REQUIRED FOR PLASTIC)
2. POLYETHYLENE PIPE AND TUBING AND THERMOPLASTIC COMPRESSION-TYPE MECHANICAL FITTINGS SHALL BE INSTALLED OUTSIDE UNDERGROUND WITH A MINIMUM 18 IN. (460mm) OF COVER. THE COVER SHALL BE PERMITTED TO BE REDUCED TO 12 IN. (300mm) IF EXTERNAL DAMAGE TO THE PIPE OR TUBING IS NOT LIKELY TO RESULT. IF A MINIMUM OF 12 IN. (300mm) OF COVER CANNOT BE MAINTAINED, THE PIPING SHALL BE INSTALLED IN CONDUIT OR BRIDGED (SHIELDED). UNDERGROUND POLYETHYLENE PIPING SYSTEMS SHALL REQUIRE ASSEMBLED ANODELESS RISERS TO TERMINATE ABOVE GROUND. THE HORIZONTAL PORTION OF RISERS SHALL BE BURIED AT LEAST 12 IN. (300mm) BELOW GRADE AND THE CASING MATERIAL USED FOR THE RISERS SHALL BE PROTECTED AGAINST CORROSION.

1 / C-3 PROPANE SUPPLY LINE DETAIL

SCALE: 1" = 1'- 0"

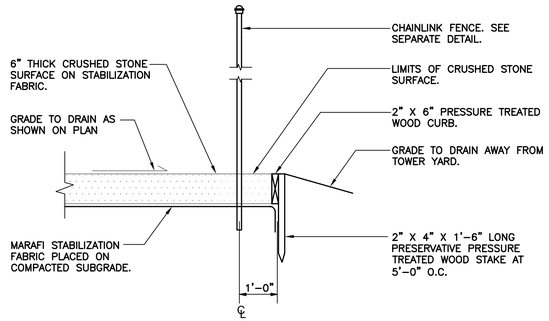

2 / C-3 COMPOUND SURFACING DETAIL

NOT TO SCALE

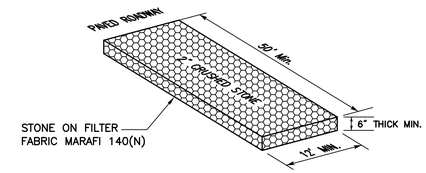

3 / C-3 CONSTRUCTION ENTRANCE ANTI-TRACKING PAD

NOT TO SCALE

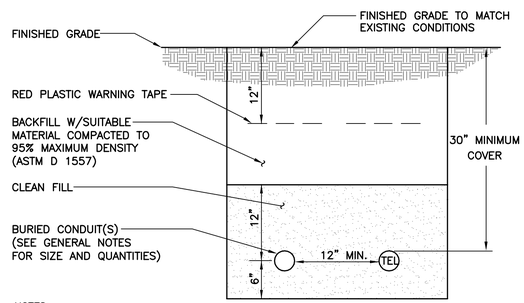

NOTES:

1. THE CLEAN FILL SHALL PASS THROUGH A 3/" MESH SCREEN AND SHALL NOT CONTAIN ASHES, CINDERS, SHELLS, FROZEN MATERIAL, LOOSE DEBRIS OR STONES LARGER THAN 2" IN MAXIMUM DIMENSION.
2. EXISTING UTILITIES ARE LIKELY TO BE ENCOUNTERED. CONTRACTOR SHALL HAND DIG AND PROTECT EXISTING UTILITIES.

4 / C-3 TYPICAL ELECTRICAL TRENCH DETAIL

NOT TO SCALE

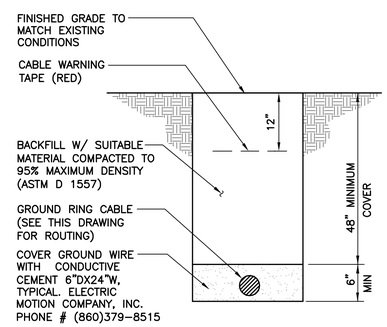

NOTES:

1. BACK FILL SHALL NOT CONTAIN ASHES, CINDERS, SHELLS, FROZEN MATERIAL, LOOSE DEBRIS OR STONES LARGER THAN 2" IN MAXIMUM DIMENSION.
2. WHERE EXISTING UTILITIES ARE LIKELY TO BE ENCOUNTERED, CONTRACTOR SHALL HAND DIG AND PROTECT EXISTING UTILITIES.

5 / C-3 TYPICAL BURIAL GROUND CABLE DETAIL

NOT TO SCALE

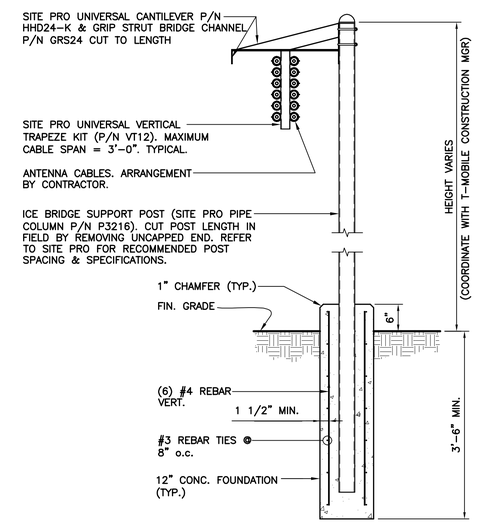

6 / C-3 ANTENNA CABLE ICE BRIDGE DETAIL

NOT TO SCALE

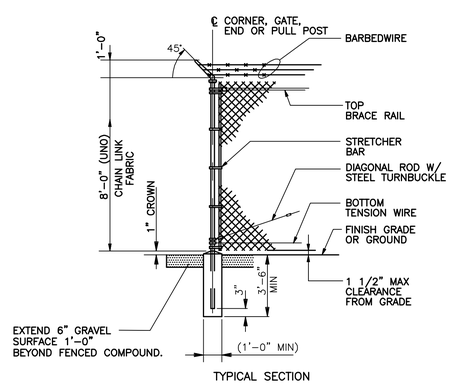

7 / C-3 WOVEN WIRE FENCE DETAIL

NOT TO SCALE

WOVEN WIRE FENCE NOTES:

1. GATE POST, CORNER, TERMINAL OR PULL POST 2 $\frac{1}{2}$"ø SCHEDULE 40 PIPE FOR GATE WIDTHS UP THRU 6 FEET OR 12 FEET FOR DOUBLE SWING GATE PER ASTM-F1083.
2. LINE POST: 2"ø SCHEDULE 40 PIPE PER ASTM-F1083.
3. GATE FRAME: 1 $\frac{1}{2}$"ø SCHEDULE 40 PIPE PER ASTM-F1083.
4. TOP RAIL & BRACE RAIL: 1 $\frac{1}{2}$"ø SCHEDULE 40 PIPE PER ASTM-F1083.
5. FABRIC: 12 GA. CORE WIRE SIZE 1 $\frac{1}{4}$" MESH, CONFORMING TO ASTM-A392.
6. TIE WIRE: MINIMUM 11 GA. GALVANIZED STEEL AT POSTS AND RAILS. A SINGLE WRAP OF FABRIC TIE AND TENSION WIRE BY HOG RINGS SPACED 24" INTERVALS.
7. TENSION WIRE: 7 GA. GALVANIZED STEEL.
8. GATE LATCH: DROP DOWN LOCKABLE FORK HATCH AND LOCK, KEYED TO OWNER'S REQUIREMENTS.
9. LOCAL ORDINANCE OF BARBED WIRE REQUIREMENTS SHALL BE COMPLIED WITH IF APPLICABLE.
10. HEIGHT = 8' VERTICAL.

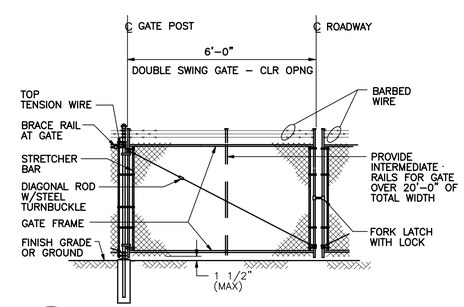

7A / C-3 WOVEN WIRE SWING GATE-DOUBLE

NOT TO SCALE

REV.	DATE	DRAWN BY	CHK'D BY	DESCRIPTION
0	04/30/19	TJR	DMD	ZONING/CONSTRUCTION DRAWINGS
	05/08/19	DMD	CJC	ZONING/CONSTRUCTION DRAWINGS - REVISED PER CLIENT COMMENTS

PROFESSIONAL ENGINEER SEAL

CENTEK engineering
Centered on Solutions™
(203) 488-0580
(203) 488-8587 Fax
63-2 North Branford Road
Branford, CT 06405
www.CentekEng.com

PYRAMID NETWORK SERVICES
WIRELESS COMMUNICATIONS FACILITY

OAK BLUFFS HIGHWAY
347 COUNTRY ROAD
VINEYARD HAVEN, MA 02568

DATE: 04/24/19
SCALE: AS NOTED
JOB NO. 19017.03

SITE DETAILS

C-3

Sheet No. 6 of 15

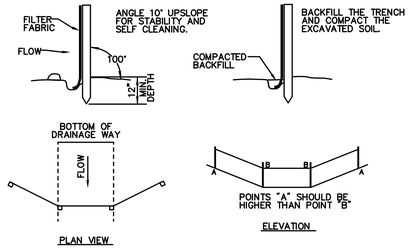

SOURCE: U.S. DEPARTMENT OF AGRICULTURE, SOIL CONSERVATION SERVICE, STORRS, CONNECTICUT

1 / C-4 **SILTATION FENCE DETAIL**

NOT TO SCALE

SOIL EROSION AND SEDIMENT CONTROL SEQUENCE

1. ALL SOIL EROSION AND SEDIMENT CONTROL MEASURES SHALL BE IN PLACE PRIOR TO ANY GRADING ACTIVITY, INSTALLATION OF PROPOSED STRUCTURES OR UTILITIES. MEASURES SHALL BE LEFT IN PLACE AND MAINTAINED UNTIL CONSTRUCTION IS COMPLETED AND/OR AREA IS STABILIZED.
2. LAND DISTURBANCE WILL BE KEPT TO A MINIMUM AND RESTABILIZATIONS WILL BE SCHEDULED AS SOON AS PRACTICAL.
3. ALL SOIL EROSION AND SEDIMENT CONTROL WORK SHALL BE DONE IN STRICT ACCORDANCE WITH THE MASSACHUSETTS GUIDELINES FOR EROSION AND SEDIMENT CONTROL INCLUDING THE LATEST DATE FROM THE COUNCIL ON SOIL AND WATER CONSERVATION.
4. ANY ADDITIONAL EROSION/SEDIMENTATION CONTROL DEEMED NECESSARY BY TOWN STAFF DURING CONSTRUCTION, SHALL BE INSTALLED BY THE DEVELOPER. IN ADDITION, THE DEVELOPER SHALL BE RESPONSIBLE FOR THE REPAIR/REPLACEMENT/MAINTENANCE OF ALL EROSION CONTROL MEASURES UNTIL ALL DISTURBED AREAS ARE STABILIZED TO THE SATISFACTION OF THE TOWN STAFF.
5. IN ALL AREAS, REMOVAL OF TREES, BUSHES AND OTHER VEGETATION AS WELL AS DISTURBANCE OF THE SOIL IS TO BE KEPT TO AN ABSOLUTE MINIMUM WHILE ALLOWING PROPER DEVELOPMENT OF THE SITE. DURING CONSTRUCTION, EXPOSE AS SMALL AN AREA OF SOIL AS POSSIBLE FOR AS SHORT A TIME AS POSSIBLE.
6. SILTATION FENCE SHALL BE PLACED AS INDICATED BEFORE A CUT SLOPE HAS BEEN CREATED. SEDIMENT DEPOSITS SHOULD BE PERIODICALLY REMOVED FROM THE UPSTREAM SIDES OF SILTATION FENCE. THIS MATERIAL IS TO BE SPREAD AND STABILIZED IN AREAS NOT SUBJECT TO EROSION, OR TO BE USED IN AREAS WHICH ARE NOT TO BE PAVED OR BUILT ON. SILTATION FENCE IS TO BE REPLACED AS NECESSARY TO PROVIDE PROPER FILTERING ACTION. THE FENCE IS TO REMAIN IN PLACE AND BE MAINTAINED TO INSURE EFFICIENT SILTATION CONTROL UNTIL ALL AREAS ABOVE THE EROSION CHECKS ARE STABILIZED AND VEGETATION HAS BEEN ESTABLISHED.
7. ALL FILL AREAS SHALL BE COMPACTED SUFFICIENTLY FOR THEIR INTENDED PURPOSE AND AS REQUIRED TO REDUCE SLIPPING, EROSION OR EXCESS SATURATION.
8. THE SOIL SHALL NOT BE PLACED WHILE IN A FROZEN OR MUDDY CONDITION, WHEN THE SUBGRADE IS EXCESSIVELY WET, OR IN A CONDITION THAT MAY OTHERWISE BE DETRIMENTAL TO PROPER GRADING OR PROPOSED SODDING OR SEEDING.
9. AFTER CONSTRUCTION IS COMPLETE AND GROUND IS STABLE, REMOVE EROSION AND SEDIMENT DEVICES.

CONSTRUCTION SPECIFICATIONS - SILT FENCE

1. THE GEOTEXTILE FABRIC SHALL MEET THE DESIGN CRITERIA FOR SILT FENCES.
2. THE FABRIC SHALL BE EMBEDDED A MINIMUM OF 8 INCHES INTO THE GROUND AND THE SOIL COMPACTED OVER THE EMBEDDED FABRIC.
3. WOVEN WIRE FENCE SHALL BE FASTENED SECURELY TO THE FENCE POSTS WITH WIRE TIES OR STAPLES.
4. FILTER CLOTH SHALL BE FASTENED SECURELY TO THE WOVEN WIRE FENCE WITH TIES SPACED EVERY 24 INCHES AT THE TOP, MID-SECTION AND BOTTOM.
5. WHEN TWO SECTIONS OF FILTER CLOTH ADJOIN EACH OTHER, THEY SHALL BE OVERLAPPED BY 6 INCHES, FOLDED, AND STAPLED.
6. FENCE POSTS SHALL BE A MINIMUM OF 36 INCHES LONG AND DRIVEN A MINIMUM OF 16 INCHES INTO THE GROUND. WOOD POSTS SHALL BE OF SOUND QUALITY HARDWOOD AND SHALL HAVE A MINIMUM CROSS SECTIONAL AREA OF 3.0 SQUARE INCHES.
7. MAINTENANCE SHALL BE PERFORMED AS NEEDED TO PREVENT BUILD UP IN THE SILT FENCE DUE TO DEPOSITION OF SEDIMENT.

MAINTENANCE - SILT FENCE

1. SILT FENCES SHALL BE INSPECTED IMMEDIATELY AFTER EACH RAINFALL AND AT LEAST DAILY DURING PROLONGED RAINFALL. ANY REPAIRS THAT ARE REQUIRED SHALL BE MADE IMMEDIATELY.
2. IF THE FABRIC ON A SILT FENCE SHOULD DECOMPOSE OR BECOME INEFFECTIVE DURING THE EXPECTED LIFE OF THE FENCE, THE FABRIC SHALL BE REPLACED PROMPTLY.
3. SEDIMENT SHOULD BE INSPECTED AFTER EVERY STORM EVENT. THE DEPOSITS SHOULD BE REMOVED WHEN THEY REACHED APPROXIMATELY ONE-HALF THE HEIGHT OF THE BARRIER.
4. SEDIMENT DEPOSITS THAT ARE REMOVED OR LEFT IN PLACE AFTER THE FABRIC HAS BEEN REMOVED SHALL BE GRADED TO CONFORM WITH THE EXISTING TOPOGRAPHY AND VEGETATED.

SITE RESTORATION NOTES

A. UNIFORMLY REGRADE ALL AREAS DISTURBED BY SITE CONSTRUCTION OPERATIONS. GRADED AREAS TO RECEIVE 3" OF CLEAN LOOM TOPSOIL SUITABLE FOR ESTABLISHMENT OF A SEEDING BED.

B. GOOD SEED/SOIL CONTACT SHALL BE ESTABLISHED BY EITHER LIGHT RAKING OR LIGHT COMPACTION WITH A HAND ROLLER OR BY FOOT.

REV.	DATE	DRAWN BY	CHK'D BY	DESCRIPTION
0	04/30/19	TJR	DMD	ZONING/CONSTRUCTION DRAWINGS
	05/08/19	DMD	CJC	ZONING/CONSTRUCTION DRAWINGS - REVISED PER CLIENT COMMENTS

PROFESSIONAL ENGINEER SEAL

STATE OF CONNECTICUT
CHRISTOPHER J. CLARE
LICENSED PROFESSIONAL ENGINEER

PYRAMID Network Services, LLC

MOTOROLA SOLUTIONS

CENTEK engineering
Centered on Solutions™
(203) 488-0580
(203) 488-8587 Fax
63-2 North Branford Road
Branford, CT 06405
www.CentekEng.com

PYRAMID NETWORK SERVICES
WIRELESS COMMUNICATIONS FACILITY
OAK BLUFFS HIGHWAY
347 COUNTRY ROAD
VINEYARD HAVEN, MA 02568

DATE: 04/24/19
SCALE: AS NOTED
JOB NO. 19017.03

EROSION CONTROL DETAILS AND NOTES

C-4

Sheet No. 7 of 15

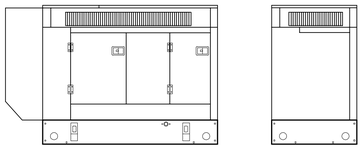

PROPANE FUELED BACKUP POWER GENERATOR		
EQUIPMENT	ENCLOSURE	DIMENSIONS
MAKE: GENERAC MODEL: SG035	LEVEL 2 ACOUSTIC ENCLOSURE	94.8"L x 38.0"W x 62.0"H
NOTES: 1. CONTRACTOR TO COORDINATE FINAL EQUIPMENT MODEL SELECTION WITH SITE OWNER'S CONSTRUCTION MANAGER PRIOR TO ORDERING.		

2 / C-5 BACK-UP GENERATOR DETAIL

SCALE: NOT TO SCALE

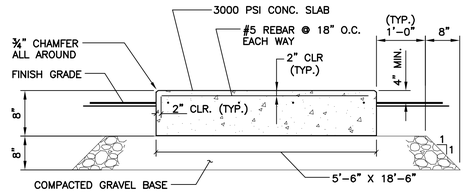

NOTES:

1. TOP OF SLAB TOLERANCE IS 1/4"±.
2. PROVIDE PVC SLEEVES FOR UTILITY CONDUIT PASSAGE THROUGH PAD OR CAST CONDUITS IN PLACE AS APPLICABLE. COORDINATE SLEEVE/CONDUIT LOCATIONS WITH CONSTRUCTION MANAGER.
3. REFER TO NOTES ON SHEET N-1 FOR ADDITIONAL REQUIREMENTS.
4. COORDINATE HOLD-DOWN HARDWARE WITH TANK MANUFACTURER.

3 / C-5 PROPANE TANK PAD DETAIL

NOT TO SCALE

CONCRETE SLAB NOTES:

1. SLAB TOLERANCE IS 1/4"±.
2. REFER TO NOTES ON DWG. N-1 FOR ADDITIONAL REQUIREMENTS.
3. PER NEC REQUIREMENTS, THE REBAR IN FOUNDATION AND FOOTING SHALL BE BONDED TO GROUND RING WITH A #2 AWG SOLID CONDUCTOR USING LISTED AND APPROVED METHODS.
4. SLAB TO BE SIZED TO ACCOMMODATE EQUIPMENT SHELTER AND BACKUP POWER GENERATOR. SEE PLAN ON SHEET C-2 FOR APPROXIMATE SLAB DIMENSIONS. CONTRACTOR TO CONFIRM ALL DIMENSIONS WITH SITE SPECIFIC SHELTER SHOP DRAWINGS AND GENERATOR SIZE AND CLEARANCE REQUIREMENTS PRIOR TO SLAB CONSTRUCTION.
5. PROVIDE PVC SLEEVES FOR UTILITY CONDUIT PASSAGE THROUGH FOUNDATION OR CAST CONDUITS IN PLACE. COORDINATE WITH SITE SPECIFIC SHELTER SHOP DRAWINGS FOR UTILITY SERVICE PENETRATION LOCATIONS, AND SHELTER HOLD-DOWN HARDWARE PRIOR TO SLAB CONSTRUCTION.
6. REFER TO ELECTRICAL DRAWINGS FOR CONDUIT SIZES AND QUANTITIES.

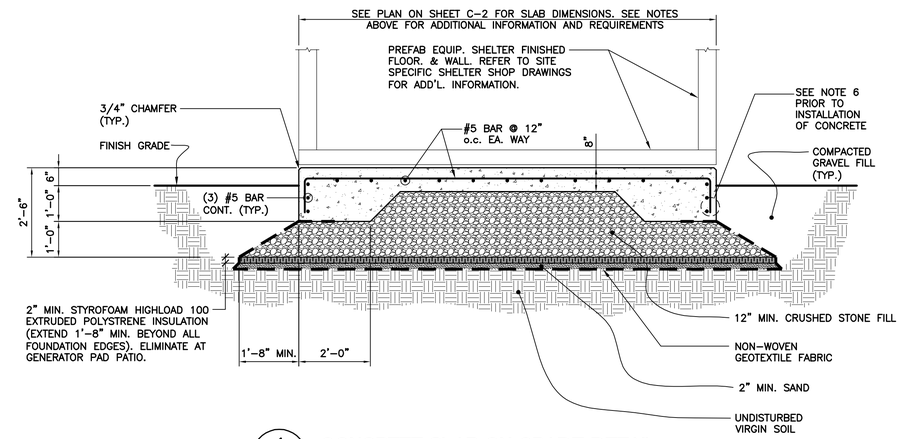

1 / C-5 CONCRETE SLAB ON GRADE DETAIL

NOT TO SCALE

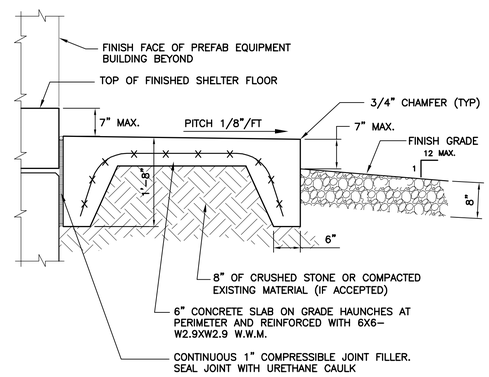

4 / C-5 ENTRY STOOP DETAIL - SECTION

SCALE: 3/16"=1'-0"

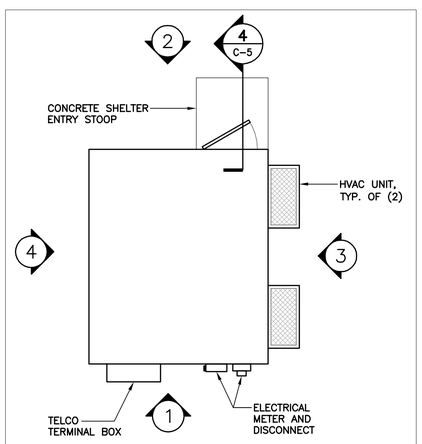

PLAN VIEW/KEY PLAN

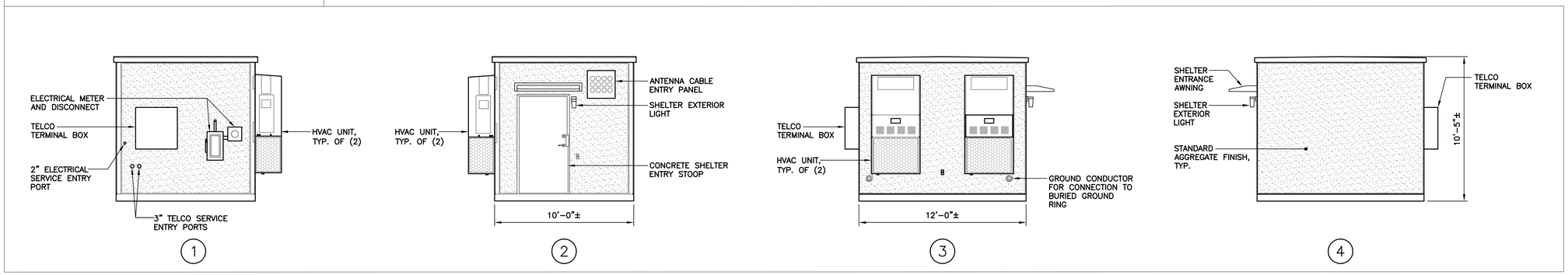

5 / C-5 EQUIPMENT SHELTER KEY PLAN AND ELEVATIONS

SCALE: 1/4" = 1'- 0"

REV.	DATE	DRAWN BY	CHK'D BY	DESCRIPTION
1	05/08/19	DMD	CJC	ZONING/CONSTRUCTION DRAWINGS - REVISED PER CLIENT COMMENTS
0	04/30/19	TJR	DMD	ZONING/CONSTRUCTION DRAWINGS

PROFESSIONAL ENGINEER SEAL

CENTEK engineering
Centered on Solutions™
(203) 488-0580
(203) 488-8587 Fax
63-2 North Branford Road
Branford, CT 06405
www.CentekEng.com

PYRAMID NETWORK SERVICES
WIRELESS COMMUNICATIONS FACILITY
OAK BLUFFS HIGHWAY
347 COUNTRY ROAD
VINEYARD HAVEN, MA 02568

DATE:	04/24/19
SCALE:	AS NOTED
JOB NO.	19017.03

SITE DETAILS AND SHELTER ELEVATIONS

C-5

Sheet No. 8 of 15

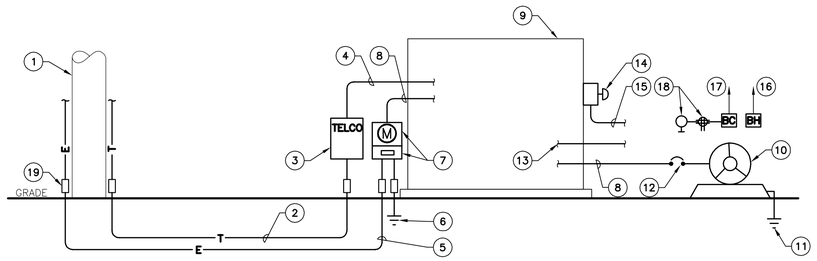

2 / E-1 **RISER DIAGRAM**

NOT TO SCALE

RISER NOTES

1. EXISTING UTILITY POLE TO REMAIN.
2. (1) 4" CONDUIT AND (1) SPARE 4" CONDUIT WITH PULL ROPES FOR FIBER TELCO SERVICE CONDUCTORS. CONDUCTORS PROVIDED BY SERVICE PROVIDER FROM UTILITY POLE TO HOFFMAN BOX. PROVIDE ALL COUPLINGS, ADAPTERS, SWEEPS AND ASSOCIATED HARDWARE. MATERIAL SHALL BE PER SERVICE PROVIDER SPECIFICATIONS.
3. 3'x3'x1' NEMA-3R HOFFMAN BOX MOUNTED TO SHELTER EXTERIOR.
4. CONDUITS AND CONDUCTORS FOR TELCO CONNECTION TO EQUIPMENT SHELTER. COORDINATE REQUIREMENTS WITH CONSTRUCTION MANAGER.
5. (3) #3/0 AWG, 3" CONDUIT ROUTED FROM UTILITY POLE TO METER DISCONNECT. COORDINATE ADDITIONAL REQUIREMENTS WITH LOCAL UTILITY COMPANY.
6. #4 AWG MAIN SERVICE GROUND IN 3/4" PVC CONDUIT BONDED TO GROUNDING TRIAD.
7. UTILITY COMPANY APPROVED 200A, 240V, SINGLE PHASE, 3 WIRE METER DISCONNECT DEVICE WITH 200A/2P MAIN CIRCUIT BREAKER MOUNTED TO SHELTER EXTERIOR. COORDINATE REQUIREMENTS WITH LOCAL UTILITY COMPANY.
8. (3) #3/0 AWG, (1) #6 AWG GROUND, 2-1/2" CONDUITS.
9. PRE-FABRICATED EQUIPMENT SHELTER.
10. 35KW, 240V, SINGLE PHASE, PROPANE FUELED BACK UP GENERATOR.
11. GENERATOR GROUND PER NEC AND MANUFACTURERS REQUIREMENTS.
12. 200A/2P, 240V GENERATOR OUTPUT CIRCUIT BREAKER.
13. 1" CONDUIT ROUTED FROM GENERATOR TO TRANSFER SWITCH FOR CONTROL WIRING.
14. EMERGENCY POWER OFF SWITCH LOCATED ON EXTERIOR OF SHELTER IN FIRE MARSHAL APPROVED LOCATION.
15. 3/4" CONDUIT AND CONDUCTORS FOR PROPER OPERATION OF EMERGENCY GENERATOR SHUT OFF SWITCH.
16. GENERATOR BLOCK HEATER WITH DEDICATED 20A/1P CIRCUIT BREAKER.
17. GENERATOR BATTERY CHARGER WITH 20A/1P CIRCUIT BREAKER.
18. WEATHERPROOF DUPLEX RECEPTACLE AND WORK LIGHT CONTROLLED BY TIMER SWITCH LOCATED IN LOCATION CONVENIENT TO GENERATOR.
19. EXSPANION COUPLING (TYP).

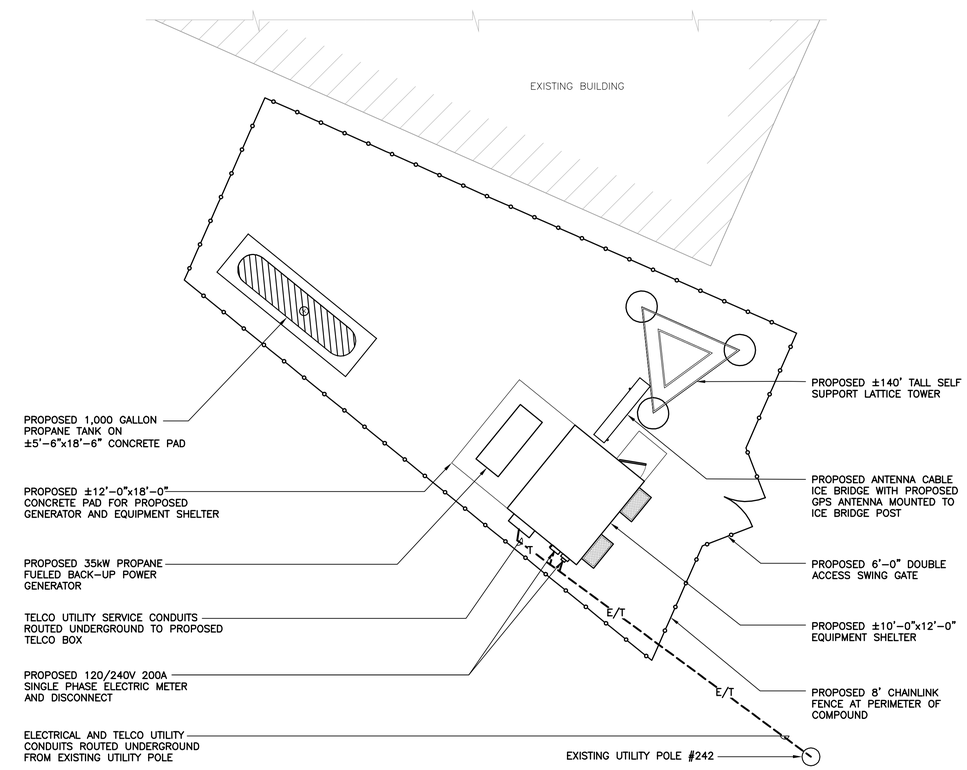

1 / E-1 **SITE UTILITY PLAN**

SCALE: 1" = 8'

APPROXIMATE NORTH

GRAPHIC SCALE

8 0 4 8 16

(IN FEET)
1 inch = 8 ft.

REV.	DATE	DRAWN BY	CHK'D BY	DESCRIPTION
1	05/08/19	TK	DMD	ZONING/CONSTRUCTION DRAWINGS - REVISD PER CLIENT COMMENTS
0	04/30/19	TK	DMD	ZONING/CONSTRUCTION DRAWINGS

PROFESSIONAL ENGINEER SEAL

CENTEK engineering
Centered on Solutions™
(203) 488-0580
(203) 488-8587 Fax
63-2 North Branford Road
Branford, CT 06405
www.CentekEng.com

PYRAMID Network Services, LLC
MOTOROLA SOLUTIONS

PYRAMID NETWORK SERVICES
WIRELESS COMMUNICATIONS FACILITY
OAK BLUFFS HIGHWAY
347 COUNTRY ROAD
VINEYARD HAVEN, MA 02568

DATE: 04/24/19
SCALE: AS NOTED
JOB NO. 19017.03

UTILITY SITE PLAN AND RISER DIAGRAM

E-1

Sheet No. 9 of 15

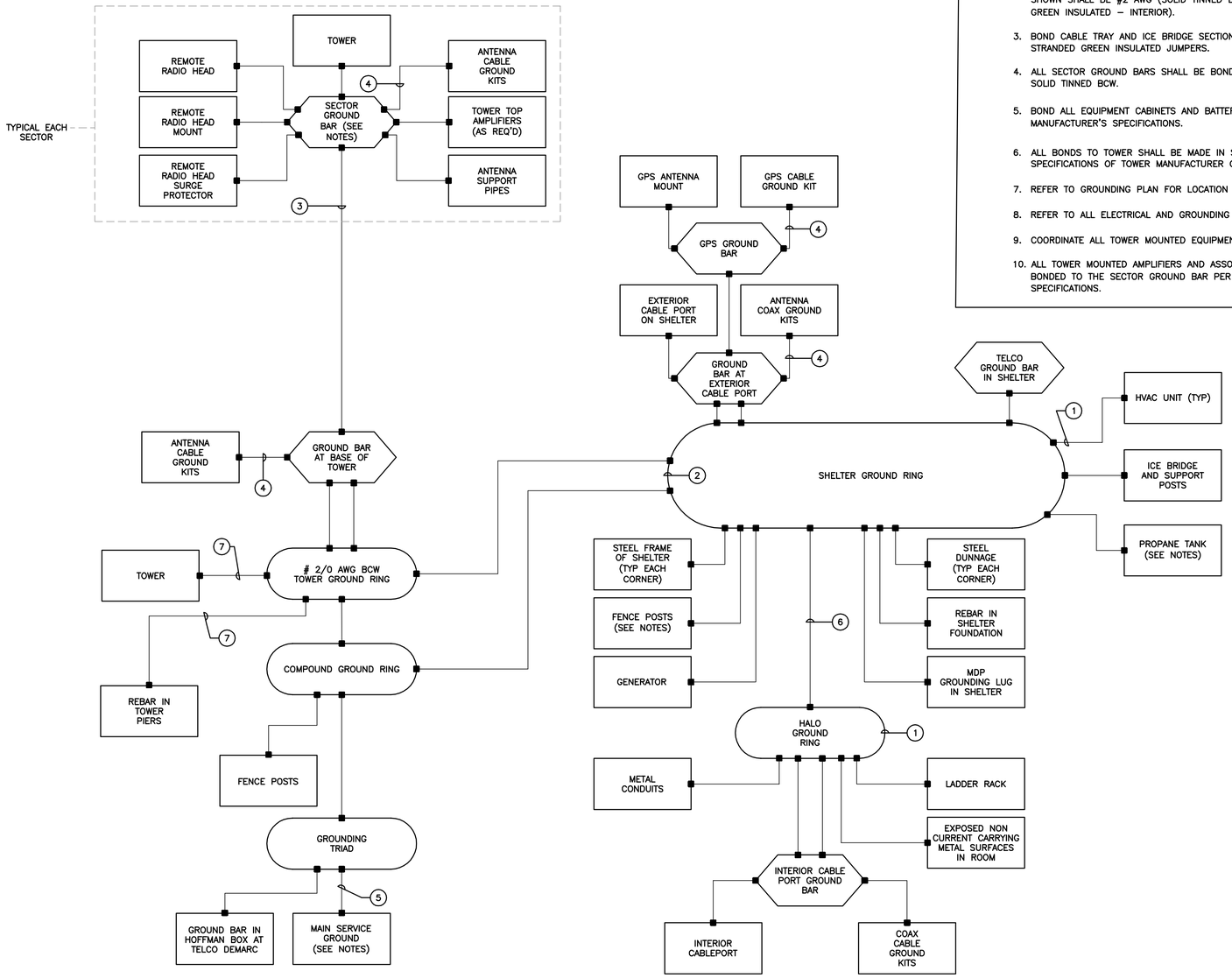

2 / E-2 **GROUNDING SCHEMATIC**

NOT TO SCALE

GROUNDING SCHEMATIC NOTES

1. #2 AWG GREEN INSULATED.
2. GROUND RING, #2 AWG BCW.
3. #2/0 GREEN INSULATED.
4. #6 AWG.
5. REFER TO RISER DIAGRAM FOR SPECIFICATIONS.
6. BOND ALL HALO GROUND RING TAILS TO GROUND RING. COORDINATE LOCATION AND QUANTITY WITH SHELTER DRAWINGS.
7. BOND WITH LISTED MECHANICAL CONNECTION.

GENERAL NOTES:

1. ALL SURGE SUPPRESSION EQUIPMENT SHALL BE BONDED TO GROUND PER MANUFACTURER'S SPECIFICATIONS
2. UNLESS OTHERWISE NOTED OR REQUIRED BY CODE, GROUND CONDUCTORS SHOWN SHALL BE #2 AWG (SOLID TINNED BCW – EXTERIOR; STRANDED GREEN INSULATED – INTERIOR).
3. BOND CABLE TRAY AND ICE BRIDGE SECTIONS TOGETHER WITH #6 AWG STRANDED GREEN INSULATED JUMPERS.
4. ALL SECTOR GROUND BARS SHALL BE BONDED TOGETHER WITH #2 AWG SOLID TINNED BCW.
5. BOND ALL EQUIPMENT CABINETS AND BATTERY CABINETS TO GROUND PER MANUFACTURER'S SPECIFICATIONS.
6. ALL BONDS TO TOWER SHALL BE MADE IN STRICT ACCORDANCE WITH SPECIFICATIONS OF TOWER MANUFACTURER OR STRUCTURAL ENGINEER.
7. REFER TO GROUNDING PLAN FOR LOCATION OF GROUNDING DEVICES.
8. REFER TO ALL ELECTRICAL AND GROUNDING DETAILS.
9. COORDINATE ALL TOWER MOUNTED EQUIPMENT WITH OWNER.
10. ALL TOWER MOUNTED AMPLIFIERS AND ASSOCIATED EQUIPMENT SHALL BE BONDED TO THE SECTOR GROUND BAR PER MANUFACTURER'S SPECIFICATIONS.
11. ALL FENCE POSTS WITHIN 6' OF EQUIPMENT SHELTER SHALL BE BONDED TO GROUND RING.
12. ALL GROUNDING SHALL BE IN ACCORDANCE WITH NEC AND OWNER'S REQUIREMENTS.
13. ALL EXPOSED METAL OBJECTS IN SHELTER SHALL BE BONDED TO THE HALO GROUND WITHIN THAT ROOM.
14. BOND GENERATOR TO GROUND PER NEC AND MANUFACTURERS SPECIFICATIONS
15. REFER TO RISER DIAGRAM FOR SPECIFICATIONS OF SERVICE GROUND AND GROUND.
16. BOND PROPANE TANK TO GROUND RING PER NEC AND MANUFACTURERS SPECIFICATIONS. COORDINATE WITH TANK MANUFACTURER FOR REQUIREMENTS PRIOR TO INSTALLATION.

REV.	DATE	DRAWN BY	CHK'D BY	DESCRIPTION
1	05/08/19	TK	DMD	ZONING/CONSTRUCTION DRAWINGS – REVISD PER CLIENT COMMENTS
0	04/30/19	TK	DMD	ZONING/CONSTRUCTION DRAWINGS

PROFESSIONAL ENGINEER SEAL

PYRAMID Network Services, LLC
MOTOROLA SOLUTIONS

CENTEK engineering
Centered on Solutions™
(203) 488-0580
(203) 488-8587 Fax
63-2 North Branford Road
Branford, CT 06405
www.CentekEng.com

PYRAMID NETWORK SERVICES
WIRELESS COMMUNICATIONS FACILITY
OAK BLUFFS HIGHWAY
347 COUNTRY ROAD
VINEYARD HAVEN, MA 02568

DATE: 04/24/19
SCALE: AS NOTED
JOB NO. 19017.03

GROUNDING SCHEMATIC AND NOTES

E-2

Sheet No. 10 of 15

NOTES

1. COORDINATE WITH RISER DIAGRAM, GROUNDING SYSTEM SCHEMATIC DIAGRAM, AND ALL GROUNDING DETAILS.
2. REFER TO ALL ELECTRICAL AND GROUNDING DETAILS.
3. ALL GROUNDING WORK MUST BE COORDINATED WITH, AND APPROVED BY TOWER OWNER PRIOR TO INSTALLATION.
4. PROVIDE ANY ADDITIONAL GROUNDING ELEMENTS REQUIRED BY TOWER OWNER.
5. REFER TO GROUNDING SCHEMATIC AND ALL DETAILS FOR ADDITIONAL INFORMATION.

GROUNDING PLAN NOTES

1. #2 SOLID TINNED BCW GROUND RING (2'–0" FROM OUTSIDE EDGE OF EQUIPMENT SHELTER FOUNDATION WHEN ROUTED ALONG SHELTER PERIMETER.) (TYP.).
2. WAVEPORT GROUND BAR PER DETAIL.
3. CONNECT FENCE TO COMPOUND GROUNDING RING PER FENCE DETAILS (TYP.)
4. GROUNDING ROD WITH ACCESS (TYP.) PER DETAIL.
5. GROUNDING ROD (TYP.) PER DETAIL.
6. ICE BRIDGE POST AND COVER. BOND EACH SECTION AND SUPPORT TO GROUND RING PER DETAIL.
7. CADWELD EQUIPMENT SHELTER TO GROUND RING (TYP. EACH CORNER).
8. EXTEND GROUND RING PIGTAIL THROUGH SHELTER AND BOND TO HALO GROUND DOWNLEAD. (TYP. 4 PLACES)
9. TOWER GROUND RING. (COORDINATE WITH TOWER PIERS).
10. BOND EQUIPMENT SHELTER GROUND RING TO TOWER GROUND RING WITH #2 AWG BCW. (TYPICAL OF TWO).
11. UPPER TOWER MOUNTED GROUND BAR PER DETAIL.
12. LOWER TOWER MOUNTED GROUND BAR PER DETAIL.
13. BOND UPPER TOWER MOUNTED GROUND BAR TO LOWER TOWER MOUNTED GROUND BAR (2 GROUND LEADS) PER DETAIL.
14. 6"ø x 200' GROUND WELL REFER TO DETAIL.
15. CONNECT TOWER PIERS TO GROUND ROD IN TOWER GROUND RING WITH #2/0 BCW. TYPICAL THREE PLACES. CADWELD TO TOWER BASE PLATE OR GROUNDING LUG PROVIDE BY TOWER MANUFACTURER. DO NOT CADWELD TO TOWER.
16. BOND GENERATOR TO GROUND PER NEC AND MANUFACTURERS SPECIFICATIONS.
17. BOND PROPANE TANK TO GROUND PER NEC AND MANUFACTURERS SPECIFICATIONS.
18. GROUND FENCE AND FENCE GATES PER DETAILS.
19. GROUNDING TRIAD. BOND TO GROUND RING.
20. #4 AWG. MAIN SERVICE GROUNDING ELECTRODE CONDUCTOR.
21. BOND HVAC EQUIPMENT TO EQUIPMENT SHELTER GROUND RING WITH #2 AWG BCW.

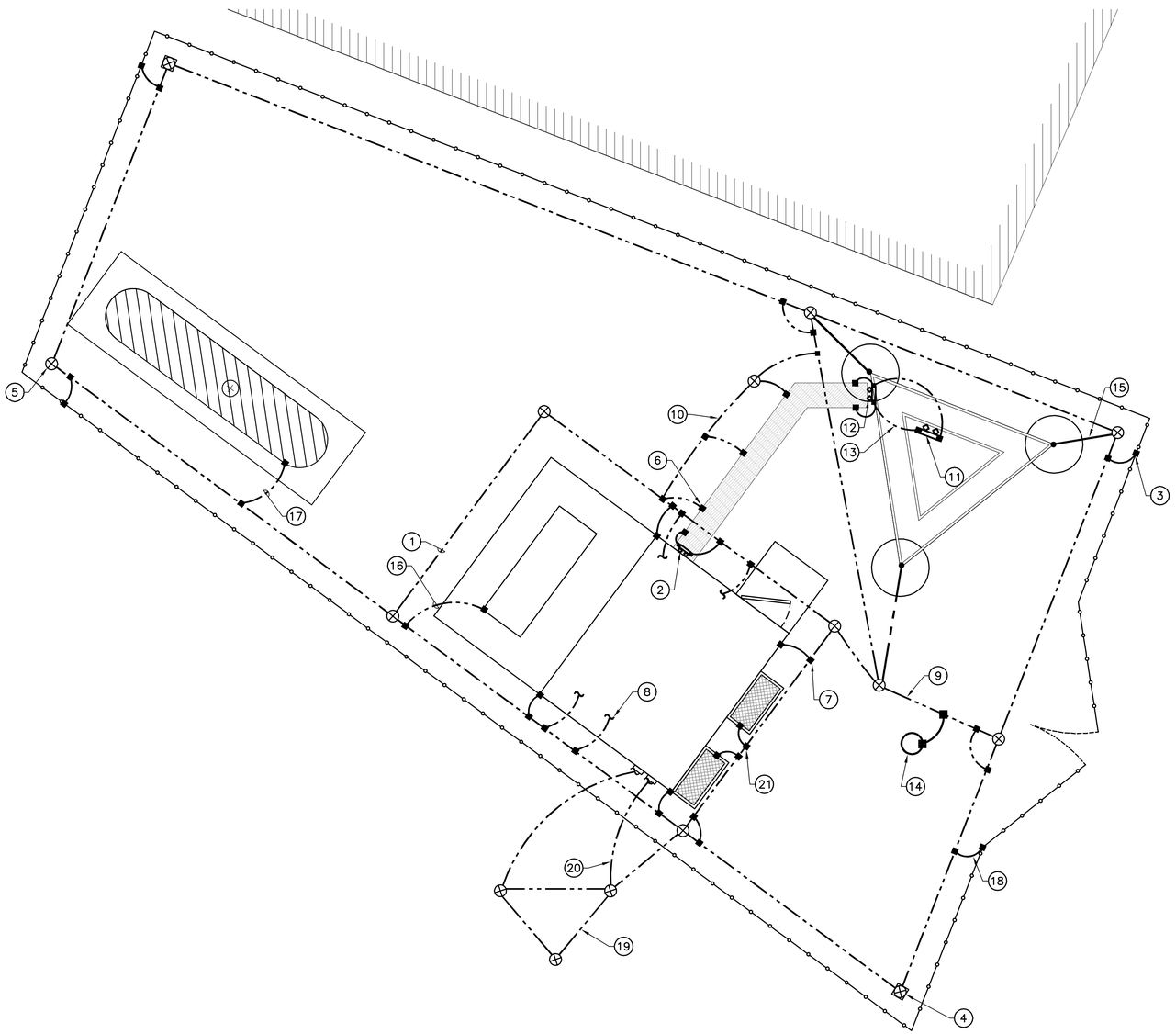

1 / E–3 **SITE GROUNDING PLAN**
SCALE: 1/4" = 1'–0"

APPROXIMATE NORTH

GRAPHIC SCALE
4 0 2 4 8
(IN FEET)
1 inch = 4 ft.

REV.	DATE	DRAWN BY	CHK'D BY	DESCRIPTION
1	05/08/19	TK	DMD	ZONING/CONSTRUCTION DRAWINGS – REVISD PER CLIENT COMMENTS
0	04/30/19	TK	DMD	ZONING/CONSTRUCTION DRAWINGS

PROFESSIONAL ENGINEER SEAL

PYRAMID Network Services, LLC
MOTOROLA SOLUTIONS

CENTEK engineering
Centered on Solutions™
(203) 488-0580
(203) 488-8587 Fax
63-2 North Branford Road
Branford, CT 06405
www.CentekEng.com

PYRAMID NETWORK SERVICES
WIRELESS COMMUNICATIONS FACILITY
OAK BLUFFS HIGHWAY
347 COUNTRY ROAD
VINEYARD HAVEN, MA 02568

DATE: 04/24/19
SCALE: AS NOTED
JOB NO. 19017.03

GROUNDING PLAN, AND NOTES

E–3

Sheet No. 11 of 15

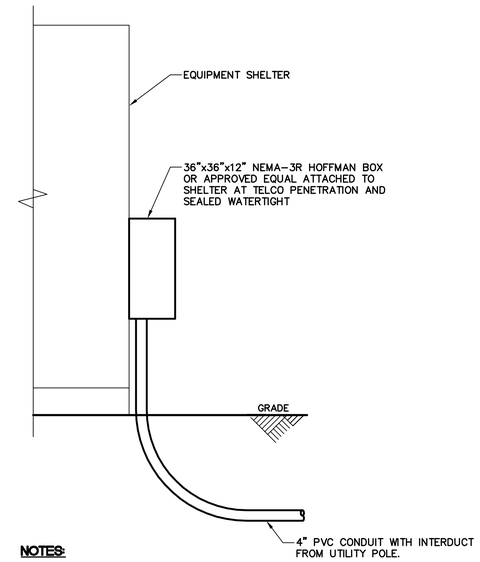

NOTES:

1. CONTRACTOR RESPONSIBLE FOR INSTALLATION OF CONDUITS, PULL ROPES, AND SUPPORT ASSEMBLY.
2. COORDINATE EXACT LOCATION AND CONDUIT SIZE WITH TELEPHONE COMPANY.

1 / E-4 **HOFFMAN BOX DETAIL**
NOT TO SCALE

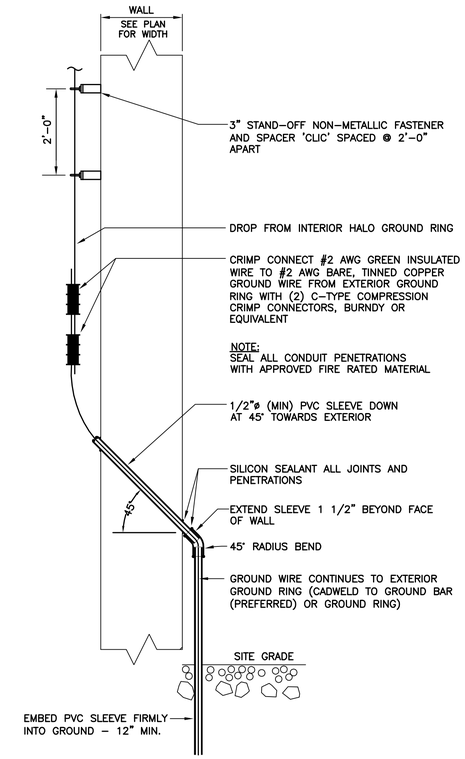

2 / E-4 **CELLULAR GROUNDING CONDUCTOR SECURED ON WALL**
N.T.S.

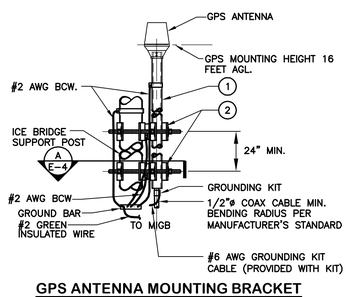

GPS ANTENNA MOUNTING BRACKET

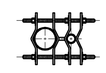

A / E-4 **SECTION**
NOT TO SCALE

BILL OF MATERIALS

ITEM	DESCRIPTION	QUANTITY
1	2-1/2"ø SCH. 40 x 8'-0" LG. MAX SS OR GALV. PIPE	1
2	UNIVERSAL CLAMP SET.	2

NOTES

1. THE ELEVATION AND LOCATION OF THE GPS ANTENNA SHALL BE IN ACCORDANCE WITH THE FINAL RF REPORT.
2. THE GPS ANTENNA MOUNT IS DESIGNED TO FASTEN TO A STANDARD 2-1/2" DIAMETER, SCHEDULE 40, GALVANIZED STEEL OR STAINLESS STEEL PIPE. THE PIPE MUST NOT BE THREADED AT THE ANTENNA MOUNT END. THE PIPE SHALL BE CUT TO THE REQUIRED LENGTH (MINIMUM OF 24 INCHES) USING A HAND OR ROTARY PIPE CUTTER TO ASSURE A SMOOTH AND PERPENDICULAR CUT. A HACK SAW SHALL NOT BE USED. THE CUT PIPE END SHALL BE DEBURRED AND SMOOTH IN ORDER TO SEAL AGAINST THE NEOPRENE GASKET ATTACHED TO THE ANTENNA MOUNT.

3 / E-4 **GPS GROUNDING/MOUNTING BRACKET DETAIL**
NOT TO SCALE

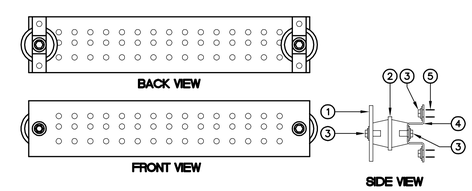

TYPICAL GROUND BAR ASSEMBLY
N.T.S.

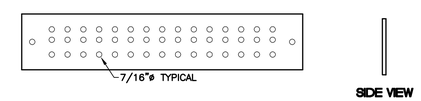

TYPICAL GROUND BAR - DIMENSIONS
N.T.S.

NOTES

1. HIGH CONDUCTIVITY TINNED COPPER BAR 1'-8"Lx4"Wx1/4"D.
2. RED COLORED STANDOFF INSULATOR PLASTIC #1872-1A.
3. STAINLESS STEEL TRUSS SPANNER MACHINE SCREWS, SPLIT LOCKWASHER AND FLAT WASHER.
4. 1"Wx1/8"T STAINLESS STEEL TYPE 304 BRACKET.
5. STAINLESS STEEL TYPE 304 HARDWARE - 3/8"ø EXPANSION BOLT FOR CONCRETE.

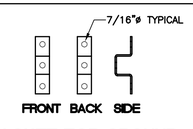

BRACKET FOR GROUND BAR-DIMENSIONS
N.T.S.

4 / E-4 **MASTER/EQUIPMENT GROUND BAR DETAILS**
N.T.S.

REV.	DATE	DRAWN BY	CHK'D BY	DESCRIPTION
1	05/08/19	TK	DMD	ZONING/CONSTRUCTION DRAWINGS - REVISD PER CLIENT COMMENTS
0	04/30/19	TK	DMD	ZONING/CONSTRUCTION DRAWINGS

PROFESSIONAL ENGINEER SEAL

PYRAMID Network Services, LLC
MOTOROLA SOLUTIONS

CENTEK engineering
Centered on Solutions™
(203) 488-0580
(203) 488-8587 Fax
63-2 North Branford Road
Branford, CT 06405
www.CentekEng.com

PYRAMID NETWORK SERVICES
WIRELESS COMMUNICATIONS FACILITY
OAK BLUFFS HIGHWAY
347 COUNTRY ROAD
VINEYARD HAVEN, MA 02568

DATE: 04/24/19
SCALE: AS NOTED
JOB NO. 19017.03

ELECTRICAL DETAILS

E-4

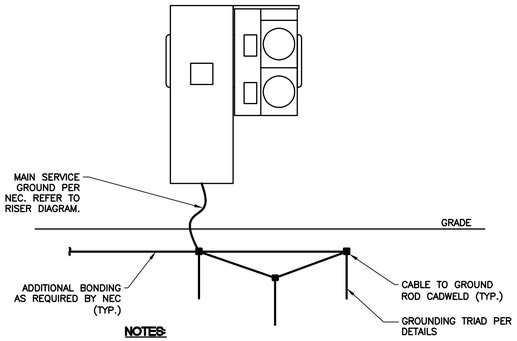

NOTES:

1. THE #2 AWG, BCW, FROM THE GROUND RING SHALL BE CADWELDED TO EACH POST, ABOVE GRADE.

1 / E-5 UTILITY FRAME GROUNDING DETAIL

NOT TO SCALE

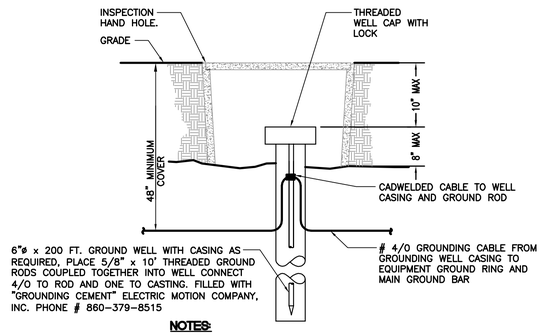

NOTES:

1. INSPECTION HAND HOLE MAY BE CONCRETE OR PVC AND SHALL BE A MINIMUM OF 12" DIA X 18" DEEP.
2. TO BE INCORPORATED INTO PROJECT IF 5 OHMS CAN NOT BE ACHIEVED AT THE PROJECT SITE

2 / E-5 GROUNDING WELL DETAIL

NOT TO SCALE

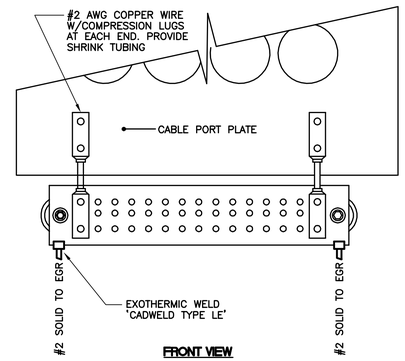

3 / E-5 CABLEPORT GROUND BAR LUG CONNECTION

NOT TO SCALE

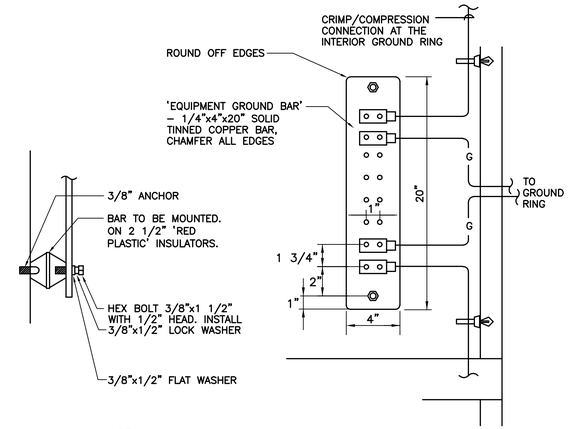

4 / E-5 EQUIPMENT GROUND BAR DETAIL

NOT TO SCALE

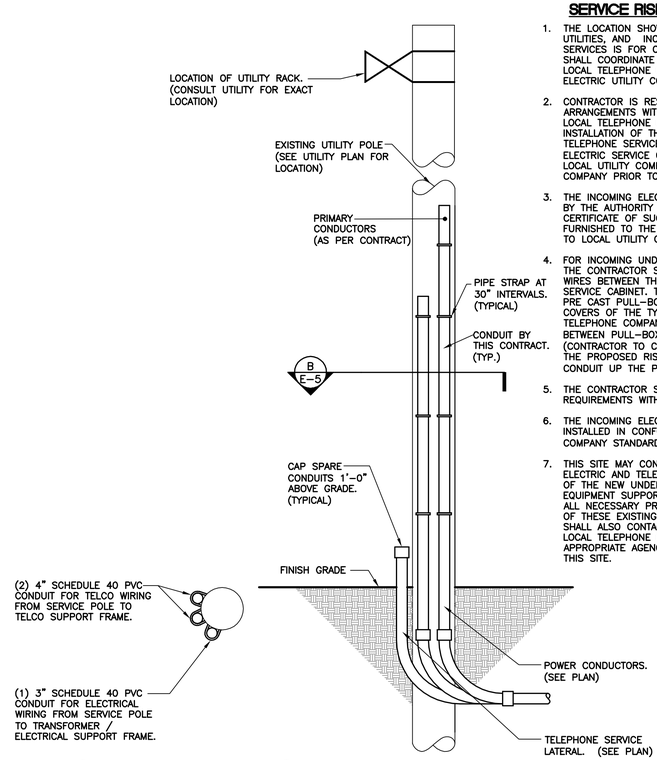

B / E-5 DETAIL

NOT TO SCALE

5 / E-5 INCOMING SERVICE POLE RISER

NOT TO SCALE

SERVICE RISER NOTES:

1. THE LOCATION SHOWN FOR THE CONNECTION TO UTILITIES, AND INCOMING POWER AND TELEPHONE SERVICES IS FOR CONCEPT ONLY. THE CONTRACTOR SHALL COORDINATE THE ACTUAL LOCATION WITH LOCAL TELEPHONE COMPANY, THE OWNER AND LOCAL ELECTRIC UTILITY COMPANY.
2. CONTRACTOR IS RESPONSIBLE FOR MAKING ARRANGEMENTS WITH LOCAL UTILITY COMPANY AND LOCAL TELEPHONE COMPANY FOR A TIMELY INSTALLATION OF THE INCOMING POWER AND TELEPHONE SERVICE. CONTRACTOR WILL OBTAIN AN ELECTRIC SERVICE ORDER (ESO) FOR THE SITE FROM LOCAL UTILITY COMPANY AND LOCAL TELEPHONE COMPANY PRIOR TO CONSTRUCTION.
3. THE INCOMING ELECTRIC SERVICE WILL BE INSPECTED BY THE AUTHORITY HAVING JURISDICTION AND A CERTIFICATE OF SUCH INSPECTION SHALL BE FURNISHED TO THE OWNER AND A COPY FORWARDED TO LOCAL UTILITY COMPANY.
4. FOR INCOMING UNDERGROUND TELEPHONE SERVICE, THE CONTRACTOR SHALL INSTALL CONDUIT AND PULL WIRES BETWEEN THE RISER POLE AND THE TELCO SERVICE CABINET. THE CONTRACTOR SHALL PROVIDE PRE CAST PULL-BOXES INCLUSIVE OF THE PRE CAST COVERS OF THE TYPE AND AS REQUIRED BY LOCAL TELEPHONE COMPANY THE MAXIMUM DISTANCE BETWEEN PULL-BOXES CAN NOT EXCEED 750' (CONTRACTOR TO CONFIRM WITH LOCAL UTILITY). AT THE PROPOSED RISER POLE EXTEND THE TELEPHONE CONDUIT UP THE POLE APPROXIMATELY 8' AND SEAL.
5. THE CONTRACTOR SHALL COORDINATE THE METER REQUIREMENTS WITH LOCAL UTILITY COMPANY.
6. THE INCOMING ELECTRICAL SERVICE SHALL BE INSTALLED IN CONFORMANCE WITH LOCAL UTILITY COMPANY STANDARDS (LATEST EDITION).
7. THIS SITE MAY CONTAIN CRITICAL UNDERGROUND ELECTRIC AND TELEPHONE SERVICES IN THE VICINITY OF THE NEW UNDERGROUND SERVICE AND THE EQUIPMENT SUPPORTS. THE CONTRACTOR SHALL TAKE ALL NECESSARY PRECAUTIONS TO AVOID DISRUPTION OF THESE EXISTING FACILITIES. THE CONTRACTOR SHALL ALSO CONTACT LOCAL UTILITY COMPANY AND LOCAL TELEPHONE COMPANY AND ALL THE APPROPRIATE AGENCIES PRIOR TO EXCAVATION AT THIS SITE.

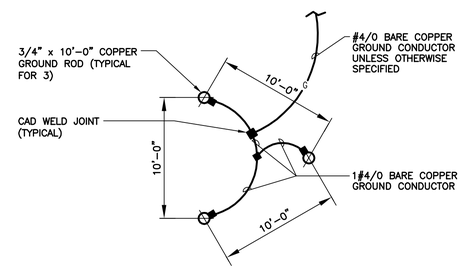

6 / E-5 GROUND TRIAD DETAIL

NOT TO SCALE

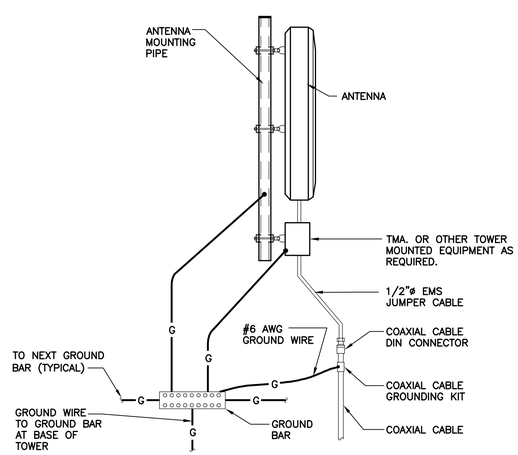

7 / E-5 TYPICAL ANTENNA GROUNDING DETAIL

NOT TO SCALE

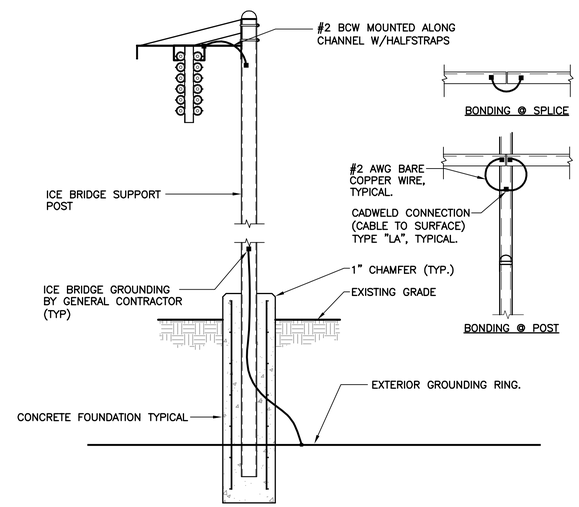

8 / E-5 ICE BRIDGE BONDING DETAIL

NOT TO SCALE

REV.	DATE	DRAWN BY	CHK'D BY	DESCRIPTION
1	05/08/19	TK	DMD	ZONING/CONSTRUCTION DRAWINGS – REVISD PER CLIENT COMMENTS
0	04/30/19	TK	DMD	ZONING/CONSTRUCTION DRAWINGS

PROFESSIONAL ENGINEER SEAL

PYRAMID Network Services, LLC
MOTOROLA SOLUTIONS

CENTEK engineering
Centered on Solutions
(203) 488-0580
(203) 488-8587 Fax
63-2 North Branford Road
Branford, CT 06405
www.CentekEng.com

PYRAMID NETWORK SERVICES
WIRELESS COMMUNICATIONS FACILITY
OAK BLUFFS HIGHWAY
347 COUNTRY ROAD
VINEYARD HAVEN, MA 02568

DATE: 04/24/19
SCALE: AS NOTED
JOB NO. 19017.03

ELECTRICAL DETAILS

E-5

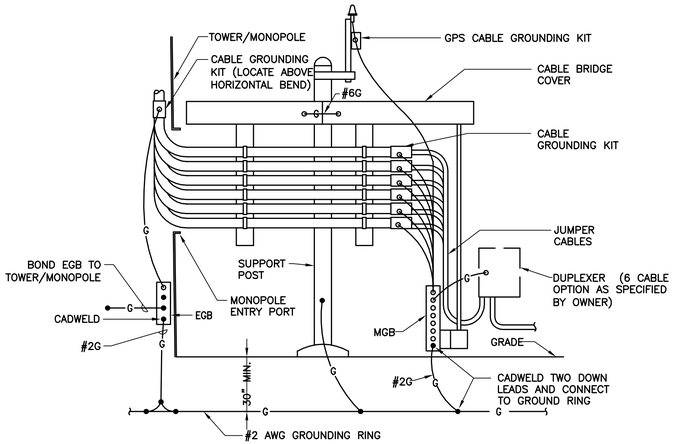

1 / E-6 **CABLE BRIDGE GROUNDING DIAGRAM**
NOT TO SCALE

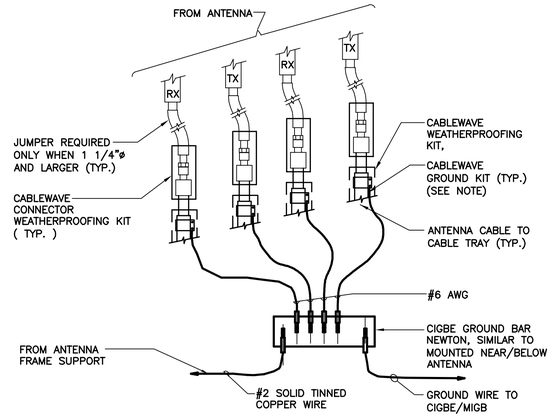

NOTES:

1. DO NOT INSTALL CABLE GROUND KIT AT A BEND AND ALWAYS DIRECT GROUND WIRE DOWN TO CIGBE

2 / E-6 **CONNECTION OF GROUND WIRES TO GROUND BAR**
NOT TO SCALE

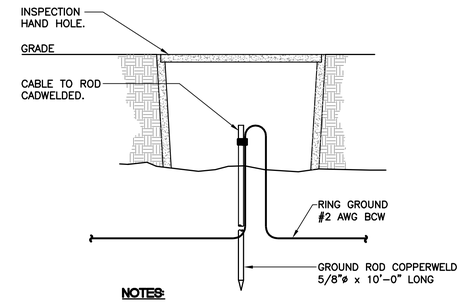

NOTES:

1. INSPECTION HAND HOLE MAY BE CONCRETE OR PVC AND SHALL BE A MINIMUM OF 12" DIA x 18" DEEP.

3 / E-6 **GROUND ROD WITH ACCESS DETAIL**
NOT TO SCALE

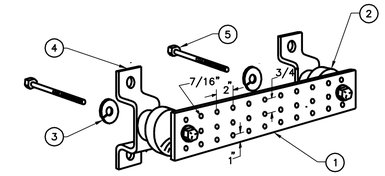

NOTES

1. TINNED COPPER GROUND BAR, 1/4" x 4" x 20", NEWTON INSTRUMENT CO. HOLE CENTERS TO MATCH NEMA DOUBLE LUG CONFIGURATION.
2. INSULATORS, NEWTON INSTRUMENT CAT. NO. 3061-4.
3. 5/8" LOCK WASHERS, NEWTON INSTRUMENT CO. CAT. NO. 3015-8.
4. WALL MOUNTING BRACKET, NEWTON INSTRUMENT CO. CAT NO. A-6056.
5. 5/8-11 x 1" STAINLESS STEEL TRUSS SPANNER MACHINE SCREWS.

4 / E-6 **GROUND BAR DETAIL**
NOT TO SCALE

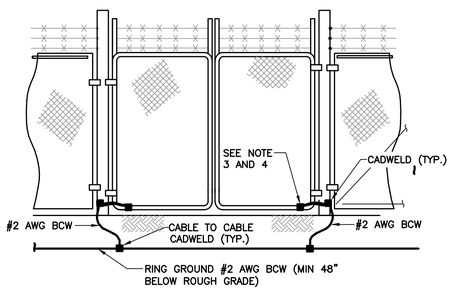

NOTES:

1. THE #2 AWG, BCW, FROM THE RING GROUND SHALL BE CADWELDED TO THE POST, ABOVE GRADE.
2. BOND EACH HORIZONTAL POLE/BRACE TO EACH OTHER AND TO EACH VERTICAL POLE BONDED TO THE EXTERIOR GROUND RING.
3. GATE JUMPER SHALL BE #4/0 AWG WELDING CABLE OR FLEXIBLE COPPER BRAID BURNDY TYPE B WITH SLEEVES ON EACH END DESIGNED FOR EXOTHERMIC WELDING.
4. GATE JUMPER SHALL BE INSTALLED SO THAT IT WILL NOT BE SUBJECTED TO DAMAGING STRAIN WHEN GATE IS FULLY OPEN IN EITHER DIRECTION.

5 / E-6 **FENCE GATE GROUNDING**
NOT TO SCALE

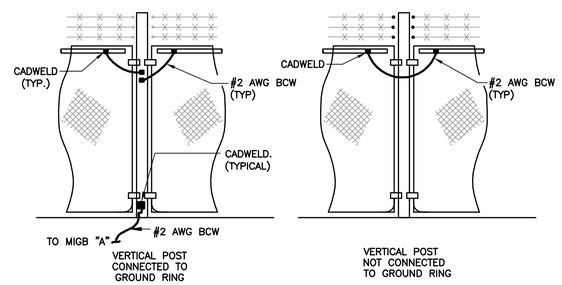

NOTES:

1. VERTICAL POSTS SHALL BE BONDED TO THE RING AT EACH CORNER AND AT EACH GATE POST. AS A MINIMUM ONE VERTICAL POST SHALL BE BONDED TO THE GROUND RING IN EVERY 100 FOOT STRAIGHT RUN OF FENCE.
2. HORIZONTAL POLES SHALL BE BONDED TO EACH OTHER.
3. BOND EACH HORIZONTAL POLE / BRACE TO EACH OTHER AND TO EACH VERTICAL POST THAT IS BONDED TO THE EXTERIOR GROUND RING.

6 / E-6 **GROUND-STD. DETAIL FENCE GROUNDING**
NOT TO SCALE

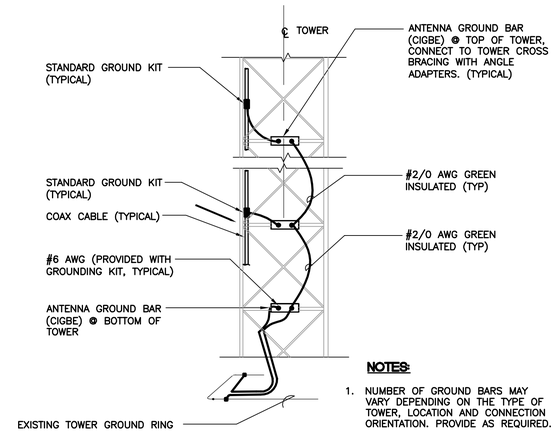

NOTES:

1. NUMBER OF GROUND BARS MAY VARY DEPENDING ON THE TYPE OF TOWER, LOCATION AND CONNECTION ORIENTATION. PROVIDE AS REQUIRED.

7 / E-6 **ANTENNA CABLE GROUNDING - LATTICE TOWER**
NOT TO SCALE

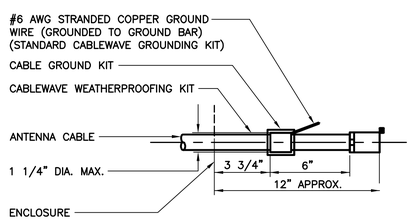

NOTES:

1. DO NOT INSTALL CABLE GROUND KIT AT A BEND AND ALWAYS DIRECT GROUND WIRE DOWN TO GROUND BAR.

8 / E-6 **ANTENNA CABLE GROUNDING DETAIL**
NOT TO SCALE

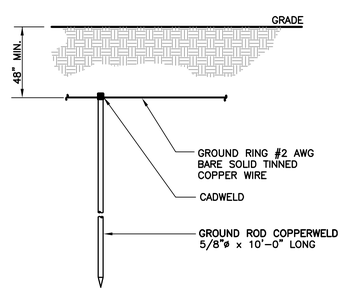

NOTES:

1. USE GROUND PLATE DETAIL IF 10 FT. GROUND ROD DEPTH CANNOT BE ACHIEVED DUE TO LEDGE CONDITION OR IF EXISTING TOWER FOUNDATION IS ENCOUNTERED.

9 / E-6 **GROUND ROD DETAIL**
NOT TO SCALE

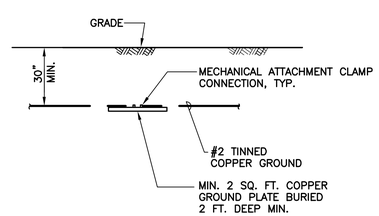

NOTES:

1. GROUND PLATE DETAIL TO BE USED ONLY IF 10 FT. GROUND ROD DEPTH CANNOT BE ACHIEVED DUE TO LEDGE CONDITION OR IF EXISTING TOWER FOUNDATION IS ENCOUNTERED.

9A / E-6 **GROUND PLATE DETAIL**
NOT TO SCALE

REV.	DATE	DRAWN BY	CHK'D BY	DESCRIPTION
1	05/08/19	TK	DMD	ZONING/CONSTRUCTION DRAWINGS - REVISD PER CLIENT COMMENTS
0	04/30/19	TK	DMD	ZONING/CONSTRUCTION DRAWINGS

PROFESSIONAL ENGINEER SEAL

PYRAMID Network Services, LLC
MOTOROLA SOLUTIONS

CENTEK engineering
Centered on Solutions™
(203) 488-0580
(203) 488-8587 Fax
63-2 North Branford Road
Branford, CT 06405
www.CentekEng.com

PYRAMID NETWORK SERVICES
WIRELESS COMMUNICATIONS FACILITY
OAK BLUFFS HIGHWAY
347 COUNTRY ROAD
VINEYARD HAVEN, MA 02568

DATE: 04/24/19
SCALE: AS NOTED
JOB NO. 19017.03

ELECTRICAL DETAILS

E-6

ELECTRICAL SPECIFICATIONS

SECTION 16010

1.01. SCOPE OF WORK

A. WORK SHALL INCLUDE ALL LABOR, EQUIPMENT AND SERVICES REQUIRED TO COMPLETE (MAKE READY FOR OPERATION) ALL THE ELECTRICAL WORK INCLUDING, BUT NOT LIMITED TO, THE FOLLOWING:

1. INSTALL 200A, 240/120V, 1P, 3 WIRE ELECTRIC SERVICE WITH REVENUE METER AND 200A MAIN CIRCUIT BREAKER FOR OWNER AND ASSOCIATED DISTRIBUTION EQUIPMENT. (AS REQUIRED BY UTILITY CO.)
2. NEW SITE TELEPHONE SERVICE AS SPECIFIED BY TELEPHONE COMPANY.
3. GENERATOR/TRANSFER SWITCH.
4. FEEDERS AND BRANCH CIRCUIT WIRING TO PANELS, RECEPTACLES, EQUIPMENT, LIGHTING FIXTURES, ETC. AS INDICATED OR NOTED ON PLANS.
5. POWER AND TEMPERATURE CONTROL WIRING FOR HVAC EQUIPMENT.
   a. FURNISH AND INSTALL ALL POWER WIRING FOR ALL HEATING, VENTILATING, AIR CONDITIONING, MOTORS AND DEVICES, AND FIRE PROTECTION EQUIPMENT INDICATED ON THE PLANS OR CALLED FOR IN THIS SPECIFICATION, EITHER ELECTRICAL OR MECHANICAL INCLUDING ALL CONTROL WIRING. ALL MAGNETIC STARTERS SHALL BE FURNISHED UNDER DIVISION 15 AND HAVE INSTALLED THEREIN A PROPER OVERLOAD HEATER FOR EACH MOTOR.
   b. ALL WIRING, BOTH POWER AND CONTROL, FOR SUCH ITEMS AS UNIT HEATERS, EXHAUST FANS, ETC., NOT SPECIFICALLY CALLED FOR IN THE TEMPERATURE CONTROL SPECIFICATIONS, SHALL BE WIRED UNDER DIVISION 16.
   c. ALL CONTROLS WHICH ARE TO BE WIRED BY THIS CONTRACTOR SHALL BE DELIVERED TO HIM BY THE CONTRACTOR/VENDOR FURNISHING THEM.
6. CELLULAR SITE ALARMS, ASSOCIATED WIRING AND DEVICES.
7. CELLULAR GROUNDING SYSTEMS, CONSISTING OF ANTENNA GROUNDING, INTERIOR GROUNDING RING, GROUND BARS, ETC.
8. FURNISH AND INSTALL 3/4" PLYWOOD BACKBOARD OF SIZE INDICATED ON DRAWINGS FOR MOUNTING OF POWER/SERVICE EQUIPMENT AND TELEPHONE/ALARM EQUIPMENT. BACKBOARDS SHALL BE PAINTED WITH TWO (2) COATS OF SEMI-GLOSS GRAY FIRE RETARDANT PAINT.
9. FIELD MEASURE EXISTING ELECTRICAL SERVICES TO CONFIRM AVAILABLE EXISTING POWER.
10. COORDINATE ALL WORK SHOWN, ON THESE PLANS WITH LOCAL UTILITY COMPANIES.

B. LOCAL UTILITY COMPANIES SHALL PROVIDE THE FOLLOWING:

1. TELEPHONE CABLES.
2. SHUTDOWN OF SERVICE (COORDINATE WITH OWNER).

C. CONTRACTOR SHALL CONFER WITH LOCAL UTILITY COMPANIES TO ASCERTAIN THE LIMITS OF THEIR WORK AND SHALL INCLUDE IN BID ANY CHARGES OR FEES MADE BY THE UTILITY COMPANIES FOR THEIR PORTION OF THE WORK AND SHALL PROVIDE AND INSTALL ALL ITEMS REQUIRED, BUT NOT PROVIDED BY UTILITY COMPANY.

D. ELECTRICAL CONTRACTOR SHALL COORDINATE ELECTRICAL INSTALLATION WITH ELECTRIC UTILITY CO. PRIOR TO INSTALLATION.

E. CONTRACTOR SHALL COORDINATE WITH TELEPHONE UTILITY COMPANY FOR LOCATION OF TELEPHONE SERVICE AND TO DETERMINE ANY REQUIRED EQUIPMENT TO BE INSTALLED BY CONTRACTOR.

SECTION 16111

1.01. CONDUIT

A. MINIMUM CONDUIT SIZE FOR BRANCH CIRCUITS, LOW VOLTAGE CONTROL AND ALARM CIRCUITS SHALL BE 3/4". ALL CONDUIT RUNS LOCATED WITHIN THE OWNER'S EQUIPMENT ROOM SHALL ORIGINATE FROM THE WIREWAY AND RUN VERTICALLY TO ITS DESTINATION. NO BENDS WILL BE ACCEPTED. CONDUITS SHALL BE PROPERLY FASTENED TO THE WALLS AND CEILINGS AS REQUIRED BY THE N.E.C.

CONDUIT MATERIAL SHALL BE AS FOLLOWS:

1. ELECTRIC METALLIC TUBING (EMT) – BRANCH CIRCUITS INSIDE WIRELESS ROOM
2. GALVANIZED RIGID CONDUIT (GRC) – FEEDERS AND CIRCUITS EXPOSED TO EXTERIOR & UNDERGROUND.
3. LIQUID TIGHT FLEXIBLE METAL CONDUIT – FOR SHORT LENGTHS (MAX. 3'-0") WIRING TO VIBRATING EQUIPMENT (HVAC UNITS, MOTORS, ETC.) IN WET LOCATIONS.
4. FLEXIBLE METAL CONDUIT – FOR SHORT LENGTHS (MAX. 3'-0") WIRING TO VIBRATING EQUIPMENT IN DRY LOCATIONS.
5. PVC CONDUIT – WHERE SHOWN ON GROUNDING DETAILS.

SECTION 16113

1.01. WIREWAYS

A. THE 4" X 4" WIREWAY LOCATED IN THE OWNER'S EQUIPMENT ROOM SHALL BE INSTALLED ALONG THE TOP OF THE INTERIOR WALL AND SHALL HAVE ONE VERTICAL DROP CONNECTED TO PANELBOARD. MANUFACTURER SHALL BE HOFFMAN ENGINEERING COMPANY OR APPROVED EQUAL.

SECTION 16114

1.01. CABLE TRAY

A. CABLE TRAY SHALL BE SOLID SIDE BAR, 18" WIDE (NEWTON INSTRUMENT COMPANY, INC.). TRAY SHALL BE INSTALLED AS SHOWN ON CONTRACT DOCUMENTS.

B. CROSSWISE RUNS SHALL BE COORDINATED WITH THE SPECIFIC EQUIPMENT THE TRAY SHALL SERVE.

C. ALL PROTRUDING CABLE TRAY SUPPORT RODS SHALL BE FILED SMOOTH WITH NO SHARP EDGES. ALL SUPPORT RODS SHALL BE CAD-PLATED FOR RUST RESISTANCE AND A MINIMUM 1/2" DIAMETER.

1.02. GENERAL REQUIREMENTS

A. THE ENTIRE ELECTRICAL INSTALLATION SHALL BE MADE IN STRICT ACCORDANCE WITH ALL LOCAL, STATE AND NATIONAL CODES AND REGULATIONS WHICH MAY APPLY AND NOTHING IN THE DRAWINGS OR SPECIFICATIONS SHALL BE INTERPRETED AS AN INFRINGEMENT OF SUCH CODES OR REGULATIONS.

B. THE ELECTRICAL CONTRACTOR IS TO BE RESPONSIBLE FOR THE COMPLETE INSTALLATION AND COORDINATION OF THE ENTIRE ELECTRICAL SERVICE. ALL ACTIVITIES TO BE COORDINATED THROUGH OWNERS REPRESENTATIVE, DESIGN ENGINEER AND OTHER AUTHORITIES HAVING JURISDICTION OF TRADES.

C. THE CONTRACTOR SHALL BE RESPONSIBLE FOR OBTAINING ALL PERMITS AND PAY ALL FEES THAT MAY BE REQUIRED FOR THE ELECTRICAL WORK AND FOR SCHEDULING OF ALL INSPECTIONS THAT MAY BE REQUIRED BY THE LOCAL AUTHORITY.

D. THE CONTRACTOR SHALL BE RESPONSIBLE FOR COORDINATION WITH THE BUILDING OWNER FOR NEW AND/OR DEMOLITION WORK INVOLVED.

E. THE CONTRACTOR SHALL BE RESPONSIBLE FOR COORDINATION WITH LOCAL TELEPHONE COMPANY THAT MAY BE REQUIRED FOR THE INSTALLATION OF TELEPHONE SERVICE TO THE PROPOSED CELLULAR SITE.

F. NO MATERIAL OTHER THAN THAT CONTAINED IN THE "LATEST LIST OF ELECTRICAL FITTINGS" APPROVED BY THE UNDERWRITERS' LABORATORIES, SHALL BE USED IN ANY PART OF THE WORK. ALL MATERIAL FOR WHICH LABEL SERVICE HAS BEEN ESTABLISHED SHALL BEAR THE U.L. LABEL.

G. THE CONTRACTOR SHALL GUARANTEE ALL NEW WORK FOR A PERIOD OF ONE YEAR FROM THE ACCEPTANCE DATE BY THE OWNER. THE CONTRACTOR SHALL BE RESPONSIBLE FOR OBTAINING WARRANTIES FROM ALL EQUIPMENT MANUFACTURERS FOR SUBMISSION TO THE OWNER.

H. DRAWINGS INDICATE GENERAL ARRANGEMENT OF WORK INCLUDED IN CONTRACT. CONTRACTOR SHALL, WITHOUT EXTRA CHARGE, MAKE MODIFICATIONS TO THE LAYOUT OF THE WORK TO PREVENT CONFLICT WITH WORK OF OTHER TRADES AND FOR THE PROPER INSTALLATION OF WORK. CHECK ALL DRAWINGS AND VISIT JOB SITE TO VERIFY SPACE AND TYPE OF EXISTING CONDITIONS IN WHICH WORK WILL BE DONE, PRIOR TO SUBMITTAL OF BID.

I. THE ELECTRICAL CONTRACTOR SHALL SUPPLY THREE (3) COMPLETE SETS OF APPROVED DRAWINGS, ENGINEERING DATA SHEETS, MAINTENANCE AND OPERATING INSTRUCTION MANUALS FOR ALL SYSTEMS AND THEIR RESPECTIVE EQUIPMENT. THESE MANUALS SHALL BE INSERTED IN VINYL COVERED 3-RING BINDERS AND TURNED OVER TO OWNER'S REPRESENTATIVE ONE (1) WEEK PRIOR TO FINAL PUNCH LIST.

J. ALL WORK SHALL BE INSTALLED IN A NEAT AND WORKMAN LIKE MANNER AND WILL BE SUBJECT TO THE APPROVAL OF THE OWNER'S REPRESENTATIVE.

K. ALL EQUIPMENT AND MATERIALS TO BE INSTALLED SHALL BE NEW, UNLESS OTHERWISE NOTED.

L. BEFORE FINAL PAYMENT, THE CONTRACTOR SHALL PROVIDE A COMPLETE SET OF PRINTS (AS-BUILTS), LEGIBLY MARKED IN RED PENCIL TO SHOW ALL CHANGES FROM THE ORIGINAL PLANS.

M. PROVIDE TEMPORARY POWER AND LIGHTING IN WORK AREAS AS REQUIRED.

N. SHOP DRAWINGS:

1. CONTRACTOR SHALL SUBMIT SIX (6) COPIES OF SHOP DRAWINGS ON ALL EQUIPMENT AND MATERIALS PROPOSED FOR USE ON THIS PROJECT, GIVING ALL DETAILS, WHICH INCLUDE DIMENSIONS, CAPACITIES, ETC.
2. CONTRACTOR SHALL SUBMIT SIX (6) COPIES OF ALL TEST REPORTS CALLED FOR IN THE SPECIFICATIONS AND DRAWINGS.

O. ENTIRE ELECTRICAL INSTALLATION SHALL BE IN ACCORDANCE WITH OWNER'S SPECIFICATIONS, AND REQUIREMENTS OF ALL LOCAL AUTHORITIES HAVING JURISDICTION. IT IS THE CONTRACTOR'S RESPONSIBILITY TO COORDINATE WITH APPROPRIATE INDIVIDUALS TO OBTAIN ALL SUCH SPECIFICATIONS AND REQUIREMENTS. NOTHING CONTAINED IN, OR OMITTED FROM, THESE DOCUMENTS SHALL RELIEVE CONTRACTOR FROM THIS OBLIGATION.

SECTION 16123

1.01. CONDUCTORS

A. ALL CONDUCTORS SHALL BE TYPE THWN (INT. APPLICATION) AND XHHW (EXT. APPLICATION), 75 DEGREE C, 600 VOLT INSULATION, SOFT ANNEALED STRANDED COPPER. #10 AWG AND SMALLER SHALL BE SPLICED USING ACCEPTABLE SOLDERLESS PRESSURE CONNECTORS. #8 AWG AND LARGER SHALL BE SPLICED USING COMPRESSION SPLIT-BOLT TYPE CONNECTORS. #12 AWG SHALL BE THE MINIMUM SIZE CONDUCTOR FOR LINE VOLTAGE BRANCH CIRCUITS. REFER TO PANEL SCHEDULE FOR BRANCH CIRCUIT CONDUCTOR SIZE(S). CONDUCTORS SHALL BE COLOR CODED FOR CONSISTENT PHASE IDENTIFICATION:

	120/208/240V	277/480V
LINE	COLOR	COLOR
A	BLACK	BROWN
B	RED	ORANGE
C	BLUE	YELLOW
N	CONTINUOUS WHITE	GREY
G	CONTINUOUS GREEN	GREEN WITH YELLOW STRIPE

B. MINIMUM BENDING RADIUS FOR CONDUCTORS SHALL BE 12 TIMES THE LARGEST DIAMETER OF BRANCH CIRCUIT CONDUCTOR.

SECTION 16130

1.01. BOXES

A. FURNISH AND INSTALL OUTLET BOXES FOR ALL DEVICES, SWITCHES, RECEPTACLES, ETC.. BOXES TO BE ZINC COATED STEEL.

B. FURNISH AND INSTALL PULL BOXES IN MAIN FEEDERS RUNS WHERE REQUIRED. PULL BOXES SHALL BE GALVANIZED STEEL WITH SCREW REMOVABLE COVERS, SIZE AND QUANTITY AS REQUIRED. PROVIDE WEATHERPROOF CONSTRUCTION IN WET LOCATIONS.

SECTION 16140

1.01. WIRING DEVICES

A. THE FOLLOWING LIST IS PROVIDED TO CONVEY THE QUALITY AND RATING OF WIRING DEVICES WHICH ARE TO BE INSTALLED. A COMPLETE LIST OF ALL DEVICES MUST BE SUBMITTED BEFORE INSTALLATION FOR APPROVAL.

1. 15 MINUTE TIMER SWITCH – INTERMATIC #FF15M (INTERIOR LIGHTS)
2. DUPLEX RECEPTACLE – P&S #2095 (GFCI) SPECIFICATION GRADE
3. SINGLE POLE SWITCH – P&S #CSB20AC2 (20A-120V HARD USE) SPECIFICATION GRADE
4. DUPLEX RECEPTACLE – P&S #5362 (20A-120V HARD USE) SPECIFICATION GRADE

B. PLATES – ALL PLATES USED SHALL BE CORROSION RESISTANT TYPE 304 STAINLESS STEEL. PLATES SHALL BE FROM SAME MANUFACTURER AS SWITCHES AND RECEPTACLES. PROVIDE WEATHERPROOF HOUSING FOR DEVICES LOCATED IN WET LOCATIONS.

C. OTHER MANUFACTURERS OF THE SWITCHES, RECEPTACLES AND PLATES MAY BE SUBMITTED FOR APPROVAL BY THE ENGINEER.

SECTION 16170

1.01. DISCONNECT SWITCHES

A. FUSIBLE AND NON-FUSIBLE, 600V, HEAVY DUTY DISCONNECT SWITCHES SHALL BE AS MANUFACTURED BY SQUARE "D". PROVIDE FUSES AS CALLED FOR ON THE CONTRACT DRAWINGS. AMPERE RATING SHALL BE CONSISTENT WITH LOAD BEING SERVED. DISCONNECT SWITCH COVER SHALL BE MECHANICALLY INTERLOCKED TO PREVENT COVER FROM OPENING WHEN THE SWITCH IS IN THE "ON" POSITION. EXTERIOR APPLICATIONS SHALL BE NEMA 3R CONSTRUCTION WITH PADLOCK FEATURE.

SECTION 16190

1.01. SEISMIC RESTRAINT

A. ALL DEVICES SHALL BE INSTALLED IN ACCORDANCE WITH ZONE 2 SEISMIC REQUIREMENTS.

SECTION 16195

1.01. LABELING AND IDENTIFICATION NOMENCLATURE FOR ELECTRICAL EQUIPMENT

A. CONTRACTOR SHALL FURNISH AND INSTALL NON-METALLIC ENGRAVED BACK-LIT NAMEPLATES ON ALL PANELS AND MAJOR ITEMS OF ELECTRICAL EQUIPMENT.

B. LETTERS TO BE WHITE ON BLACK BACKGROUND WITH LETTERS 1-1/2 INCH HIGH WITH 1/4 INCH MARGIN.

C. IDENTIFICATION NOMENCLATURE SHALL BE IN ACCORDANCE WITH OWNER'S STANDARDS.

D. PROVIDE NAMEPLATE FOR PORTABLE ENGINE/GENERATOR CONNECTION SHOWING VOLTAGE KVA/KW RATING, # PHASE, AND # OF WIRES. PLATE TO BE PLASTIC ENGRAVED, RED WITH WHITE LETTERS.

E. ALL RECEPTACLES, SWITCHES, DISCONNECT SWITCHES, ETC. SHALL BE LABELED WITH THE CORRECT BRANCH CIRCUIT NUMBER SERVED BY MEANS OF PERMANENT PRESSED TYPE BLACK 1/4" TRANSFER LETTERING. (FOR EXAMPLE: "MDP-5", ETC.).

F. PROVIDE A NAMEPLATE AT THE SERVICE EQUIPMENT INDICATING THE TYPE AND LOCATION OF THE ON SITE GENERATOR.

SECTION 16620
(SUPPLIED BY OWNER, INSTALLED BY CONTRACTOR)

1.01. GENERATOR SET

A. REFER TO CONTRACT DRAWINGS FOR DETAILS AND SCHEDULES.

SECTION 16960

1.01. TESTS BY INDEPENDENT ELECTRICAL TESTING FIRM

A. CONTRACTOR SHALL RETAIN THE SERVICES OF A LOCAL INDEPENDENT ELECTRICAL TESTING FIRM (WITH MINIMUM 5 YEARS COMMERCIAL EXPERIENCE IN THE ELECTRICAL TESTING INDUSTRY) AS SPECIFIED BY OWNER TO PERFORM:

TEST 1: THERMAL OVERLOAD AND MAGNETIC TRIP TEST, AND CABLE INSULATION TEST FOR ALL CIRCUIT BREAKERS RATED 100 AMPS OR GREATER.

TEST 2: RESISTANCE TO GROUND TEST ON THE CELLULAR GROUNDING SYSTEM.

THE TESTING FIRM SHALL INCLUDE THE FOLLOWING INFORMATION WITH THE REPORT:

1. TESTING PROCEDURE INCLUDING THE MAKE AND MODEL OF TEST EQUIPMENT.
2. CERTIFICATION OF TESTING EQUIPMENT CALIBRATION WITHIN SIX (6) MONTHS OF DATE OF TESTING. INCLUDE CERTIFICATION LAB ADDRESS AND TELEPHONE NUMBER.
3. GRAPHICAL DESCRIPTION OF TESTING METHOD ACTUALLY IMPLEMENTED.

B. THESE TESTS SHALL BE PERFORMED IN THE PRESENCE AND TO THE SATISFACTION OF OWNER'S CONSTRUCTION REPRESENTATIVE. TESTING DATA SHALL BE INITIALED AND DATED BY THE CONSTRUCTION REPRESENTATIVE AND INCLUDED WITH THE WRITTEN REPORT/ANALYSIS.

C. THE CONTRACTOR SHALL FORWARD SIX (6) COPIES OF THE INDEPENDENT ELECTRICAL TESTING FIRM'S REPORT/ANALYSIS TO ENGINEER A MINIMUM OF TEN (10) WORKING DAYS PRIOR TO THE JOB TURNOVER.

D. CONTRACTOR TO PROVIDE A MINIMUM OF ONE (1) WEEK NOTICE TO OWNER AND ENGINEER FOR ALL TESTS REQUIRING WITNESSING.

SECTION 16961

1.01. TESTS BY CONTRACTOR

A. ALL TESTS AS REQUIRED UPON COMPLETION OF WORK, SHALL BE MADE BY THIS CONTRACTOR. THESE SHALL BE CONTINUITY AND INSULATION TESTS; TEST TO DETERMINE THE QUALITY OF MATERIALS, ETC. AND SHALL BE MADE IN ACCORDANCE WITH N.E.C. RECOMMENDATIONS. ALL FEEDERS AND BRANCH CIRCUIT WIRING (EXCEPT CLASS 2 SIGNAL CIRCUITS) MUST BE TESTED FREE FROM SHORT CIRCUIT AND GROUND FAULT CONDITIONS AT 500V IN A REASONABLY DRY AMBIENT OF APPROXIMATELY 70 DEGREES F.

B. CONTRACTOR SHALL PERFORM LOAD PHASE BALANCING TESTS. CIRCUITS SHALL BE SO CONNECTED TO THE PANELBOARDS SUCH THAT THE NEW LOAD IS DISTRIBUTED AS EQUALLY AS POSSIBLE BETWEEN EACH LOAD AND NEUTRAL. 10% SHALL BE CONSIDERED AS A REASONABLE AND ACCEPTABLE ALLOWANCE. BRANCH CIRCUITS SHALL BE BALANCED ON THEIR OWN PANELBOARDS; FEEDER LOADS SHALL, IN TURN, BE BALANCED ON THE SERVICE EQUIPMENT. REASONABLE LOAD TEST SHALL BE ARRANGED TO VERIFY LOAD BALANCE IF REQUESTED BY THE ENGINEER.

C. ALL TESTS, UPON REQUEST, SHALL BE REPEATED IN THE PRESENCE OF OWNER'S REPRESENTATIVE. ALL TESTS SHALL BE DOCUMENTED AND TURNED OVER TO OWNER. OWNER SHALL HAVE THE AUTHORITY TO STOP ANY OF THE WORK NOT BEING PROPERLY INSTALLED. ALL SUCH DETECTED WORK SHALL BE REPAIRED OR REPLACED AT NO ADDITIONAL EXPENSE TO THE OWNER AND THE TESTS SHALL BE REPEATED.

SECTION 16450

1.01. GROUNDING

A. ALL NON-CURRENT CARRYING PARTS OF THE ELECTRICAL AND TELEPHONE CONDUIT SYSTEMS SHALL BE MECHANICALLY AND ELECTRICALLY CONNECTED TO PROVIDE AN INDEPENDENT RETURN PATH TO THE EQUIPMENT GROUNDING SOURCES.

B. GROUNDING SYSTEM WILL BE IN ACCORDANCE WITH THE LATEST ACCEPTABLE EDITION OF THE NATIONAL ELECTRICAL CODE AND REQUIREMENTS PER LOCAL INSPECTOR HAVING JURISDICTION.

C. GROUNDING OF PANELBOARDS:

1. PANELBOARD SHALL BE GROUNDED BY TERMINATING THE PANELBOARD FEEDER'S EQUIPMENT GROUND CONDUCTOR TO THE EQUIPMENT GROUND BAR KIT(S) LUGGED TO THE CABINET. ENSURE THAT THE SURFACE BETWEEN THE KIT AND CABINET ARE BARE METAL TO BARE METAL. PRIME AND PAINT OVER TO PREVENT CORROSION.
2. CONDUIT(S) TERMINATING INTO THE PANELBOARD SHALL HAVE GROUNDING TYPE BUSHINGS. THE BUSHINGS SHALL BE BONDED TOGETHER WITH BARE #10 AWG COPPER CONDUCTOR WHICH IN TURN IS TERMINATED INTO THE PANELBOARD'S EQUIPMENT GROUND BAR KIT(S).

D. EQUIPMENT GROUNDING CONDUCTOR:

1. EACH EQUIPMENT GROUND CONDUCTOR SHALL BE SIZED IN ACCORDANCE WITH THE N.E.C. ARTICLE 250-122.
2. THE MINIMUM SIZE OF EQUIPMENT GROUND CONDUCTOR SHALL BE #12 AWG COPPER.
3. REFER TO PANEL SCHEDULE "BRANCH CIRCUIT" DATA FOR EQUIPMENT GROUND CONDUCTOR SIZE FOR EACH BRANCH CIRCUIT.
4. EACH FEEDER OR BRANCH CIRCUIT SHALL HAVE EQUIPMENT GROUND CONDUCTOR(S) INSTALLED IN THE SAME RACEWAY(S).

E. CELLULAR GROUNDING SYSTEM:

CONTRACTOR SHALL PROVIDE A CELLULAR GROUNDING SYSTEM WITH THE MAXIMUM AC RESISTANCE TO GROUND OF 5 OHM BETWEEN ANY POINT ON THE GROUNDING SYSTEM AS MEASURED BY 3-POINT GROUNDING TEST. (REFER TO SECTION 16960).

PROVIDE THE CELLULAR GROUNDING SYSTEM AS SPECIFIED ON DRAWINGS, INCLUDING, BUT NOT LIMITED TO:

1. GROUND BARS
2. INTERIOR GROUND RING
3. EXTERIOR GROUNDING (WHERE REQUIRED DUE TO MEASURED AC RESISTANCE GREATER THAN SPECIFIED).
4. ANTENNA GROUND CONNECTIONS AND PLATES.

F. CONTRACTOR, AFTER COMPLETION OF THE COMPLETE GROUNDING SYSTEM BUT PRIOR TO CONCEALMENT/BURIAL OF SAME, SHALL NOTIFY OWNER'S WIRELESS PROJECT ENGINEER WHO WILL HAVE A DESIGN ENGINEER VISIT SITE AND MAKE A VISUAL INSPECTION OF THE GROUNDING GRID AND CONNECTIONS OF THE SYSTEM.

G. ALL EQUIPMENT SHALL BE BONDED TO GROUND AS REQUIRED BY N.E.C., MFG. SPECIFICATIONS, AND OWNER'S SPECIFICATIONS.

SECTION 16470

1.01. DISTRIBUTION EQUIPMENT

A. REFER TO CONTRACT DRAWINGS FOR DETAILS AND SCHEDULES.

SECTION 16477

1.01. FUSES

A. FUSES SHALL BE NONRENEWABLE TYPE AS MANUFACTURED BY "BUSSMAN" OR APPROVED EQUAL. FUSES RATED TO 1/10 AMPERE UP TO 600 AMPERES SHALL BE EQUIVALENT TO BUSSMAN TYPE LPN-RK (250V) UL CLASS RK1, LOW PEAK, DUAL ELEMENT, TIME-DELAY FUSES. FUSES SHALL HAVE SEPARATE SHORT CIRCUIT AND OVERLOAD ELEMENTS AND HAVE AN INTERRUPTING RATING OF 200 KAIC. UPON COMPLETION OF WORK, PROVIDE ONE SPARE SET OF FUSES FOR EACH TYPE INSTALLED.

REV.	DATE	DRAWN BY	CHK'D BY	DESCRIPTION
1	05/08/19	TK	DMD	ZONING/CONSTRUCTION DRAWINGS – REVISD PER CLIENT COMMENTS
0	04/30/19	TK	DMD	ZONING/CONSTRUCTION DRAWINGS

PROFESSIONAL ENGINEER SEAL

CENTEK engineering
Centered on Solutions™
(203) 488-0580
(203) 488-8587 Fax
63-2 North Branford Road
Branford, CT 06405
www.CentekEng.com

PYRAMID Network Services, LLC
MOTOROLA SOLUTIONS

PYRAMID NETWORK SERVICES
WIRELESS COMMUNICATIONS FACILITY
OAK BLUFFS HIGHWAY
347 COUNTRY ROAD
VINEYARD HAVEN, MA 02568

DATE: 04/24/19
SCALE: AS NOTED
JOB NO. 19017.03

ELECTRICAL SPECIFICATIONS

E-7

Sheet No. 15 of 15