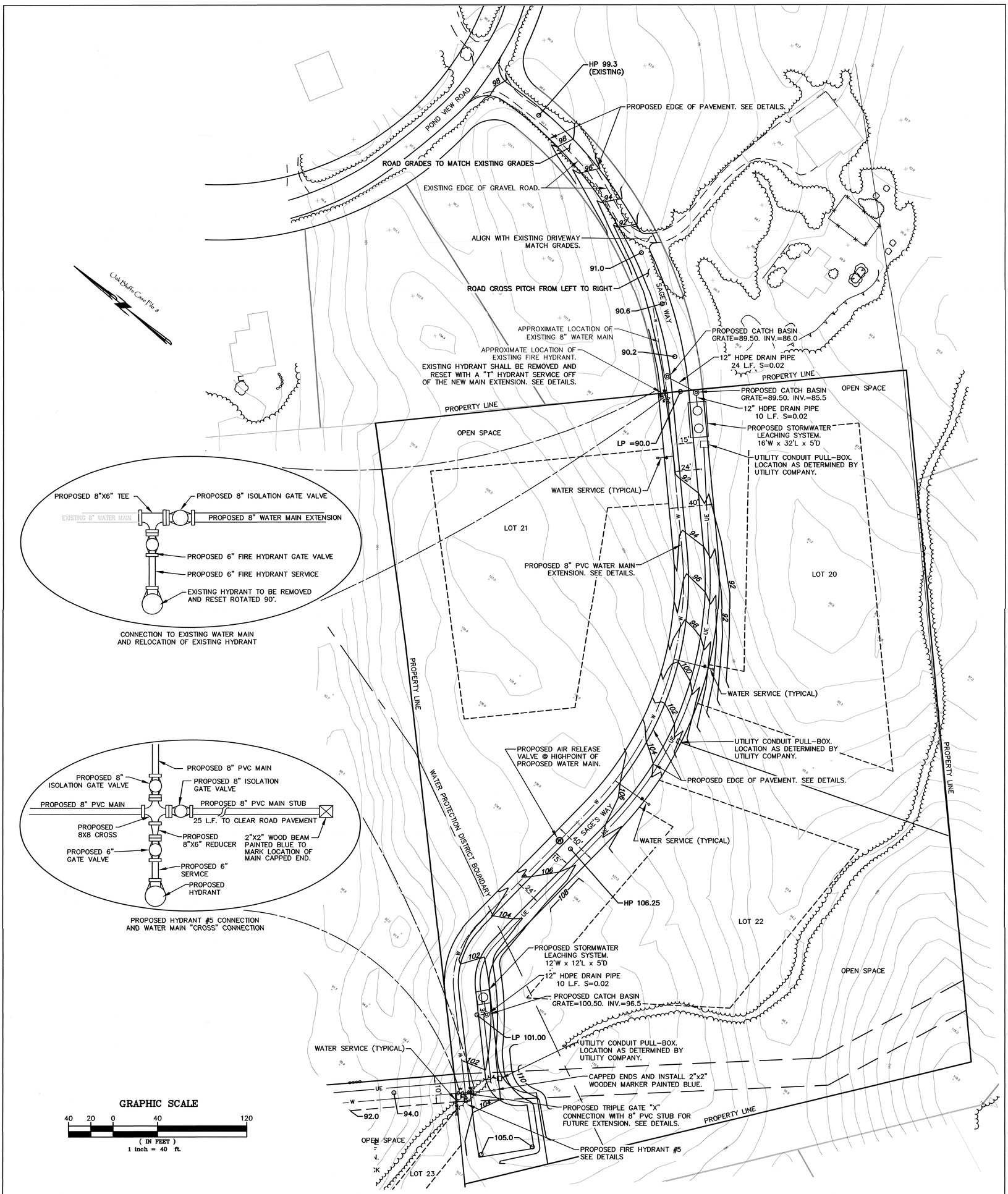

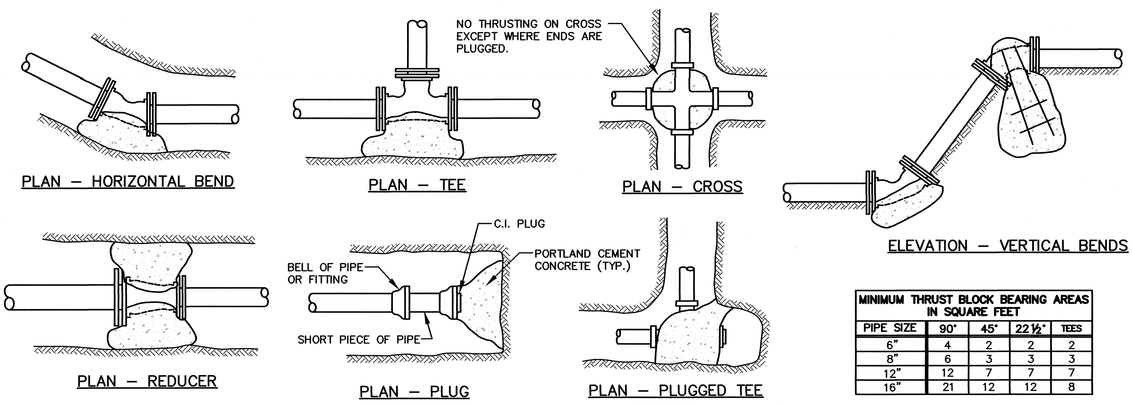

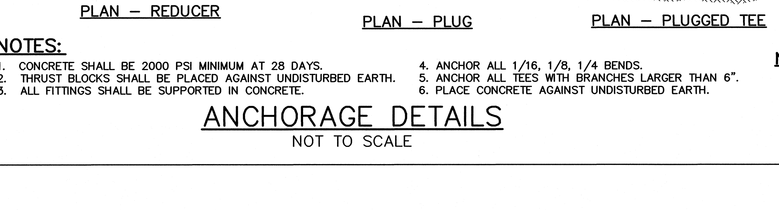

MINIMUM THRUST BLOCK BEARING AREAS IN SQUARE FEET				
PIPE SIZE	90°	45°	22½°	TEES
6"	4	2	2	2
8"	6	3	3	3
12"	12	7	7	7
16"	21	12	12	8

NOTES:

1. CONCRETE SHALL BE 2000 PSI MINIMUM AT 28 DAYS.
2. THRUST BLOCKS SHALL BE PLACED AGAINST UNDISTURBED EARTH.
3. ALL FITTINGS SHALL BE SUPPORTED IN CONCRETE.
4. ANCHOR ALL 1/16, 1/8, 1/4 BENDS.
5. ANCHOR ALL TEES WITH BRANCHES LARGER THAN 6".
6. PLACE CONCRETE AGAINST UNDISTURBED EARTH.

ANCHORAGE DETAILS

NOT TO SCALE

NOTE: CONTRACTOR SHALL REFER TO WRITTEN SPECIFICATIONS PUBLISHED BY OAK BLUFFS WATER DISTRICT

NOTICE
Unless and until such time as the original (red) stamp of the responsible Professional Engineer, or Professional Land Surveyor appears on this plan:
(A) no person or persons, including any municipal or other public officials, may rely upon the information contained herein; and
(B) this plan remains the property of Holmes & McGrath, Inc.

DATE	DESCRIPTION	Drawn	Checked
12/18/17	ADD AIR RELEASE VALVE LOCATIONS & NOTE	LAC	

REVISIONS

PLAN OF PROPOSED UTILITIES FOR DOUBLE OX ROAD, HOPE'S WAY & SAGE'S WAY

PREPARED FOR

LAGOON RIDGE

FOR LOTS 1 THROUGH 23

IN

MAP 35/LOT 3 — OAK BLUFFS — MA

SCALE: 1" = 40' | DATE: NOV. 20, 2017

holmes and mcgrath, inc.
civil engineers and land surveyors
205 worcester court, suite A4 (508) 548-3564 (PHONE)
falmouth, ma. 02540 (508) 548-9672 (FAX)

DRAWN: RLR, LAC | CHECKED:

JOB NO: 215299 | DWG. NO.: 88-5-57B | SHEET 4 OF 5

Lagoon_Ridge\215299\215299utilities.dwg