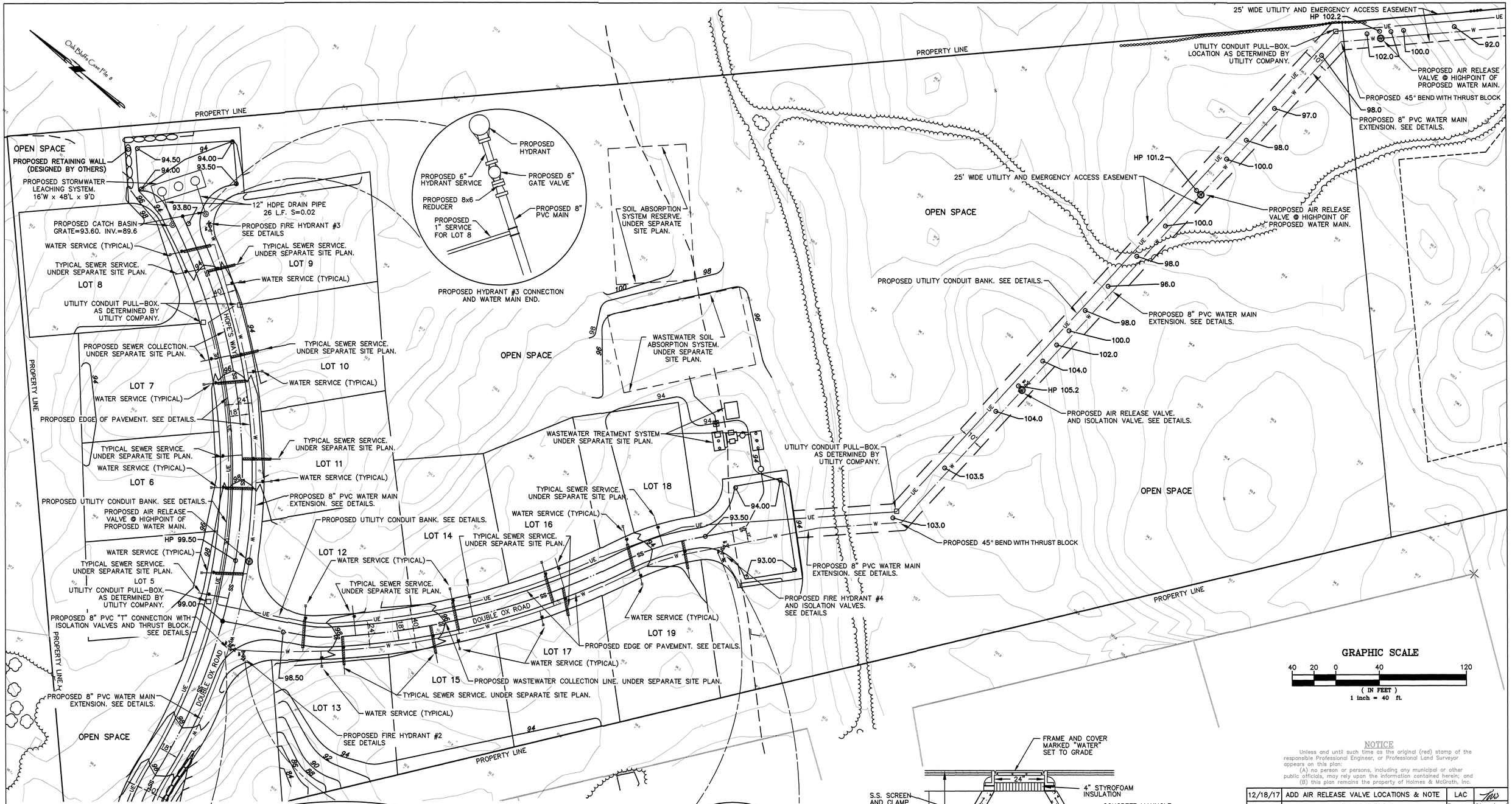

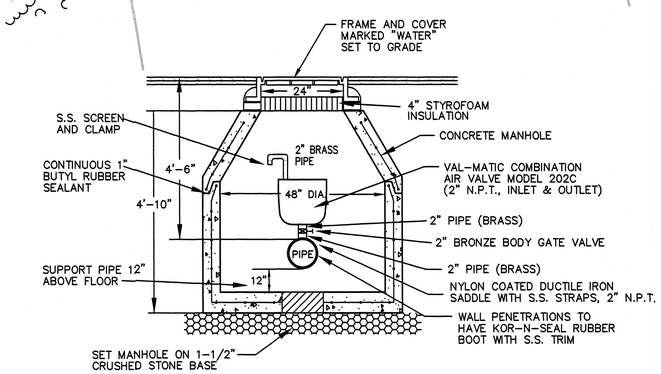

AIR RELEASE VALVE DETAIL

SCALE: 1/2" = 1'-0"

NOTICE

Unless and until such time as the original (red) stamp of the responsible Professional Engineer, or Professional Land Surveyor appears on this plan:
(A) no person or persons, including any municipal or other public officials, may rely upon the information contained herein; and
(B) this plan remains the property of Holmes & McGrath, Inc.

DATE	DESCRIPTION	Drawn	Checked
12/18/17	ADD AIR RELEASE VALVE LOCATIONS & NOTE	LAC	

REVISIONS

PLAN OF PROPOSED UTILITIES FOR DOUBLE OX ROAD, HOPE'S WAY & SAGE'S WAY

PREPARED FOR

LAGOON RIDGE

FOR LOTS 1 THROUGH 23
IN
MAP 35/LOT 3 — OAK BLUFFS — MA

SCALE: 1" = 40' | DATE: NOV. 20, 2017

holmes and mcgrath, inc.
civil engineers and land surveyors
205 worcester court, suite A4 (508) 548-3564 (PHONE)
falmouth, ma. 02540 (508) 548-9672 (FAX)

DRAWN: RLR, LAC | CHECKED:

JOB NO: 215299 | DWG. NO.: 88-5-57B | SHEET 3 OF 5

Lagoon Ridge\215299\215299utilities.dwg